SUPERMICRO®
X10DRL-LN4
Quick Reference Guide Rev.1.0a

Contact Information
- Website: www.supermicro.com
- General Information: marketing@supermicro.com
- Tech Support: support@supermicro.com
- Phone: +1 (408) 503-8000, Fax: +1 (408) 503-8008

For your system to work properly, please download appropriate drivers/images/user's manual from the links below:
- Manuals: http://www.supermicro.com/support/manuals/
- Drivers & Utilities: http://www.supermicro.com/wftp
- Safety: http://www.supermicro.com/about/policies/safety_information.cfm

Package Contents
- One (1) Supermicro Motherboard
- Two (2) SATA Cables (CBL-0044L)
- Two (2) iPass to 4-SATA Cables (CBL-0097L-03)
- One (1) I/O Shield (MCP-260-00062-1N)
- One (1) Quick Reference Guide

WARNING: This product can expose you to chemicals including lead, known to the State of California to cause cancer and birth defects or other reproductive harm. For more information, go to www.P65Warnings.ca.gov.

Motherboard Layout and Features

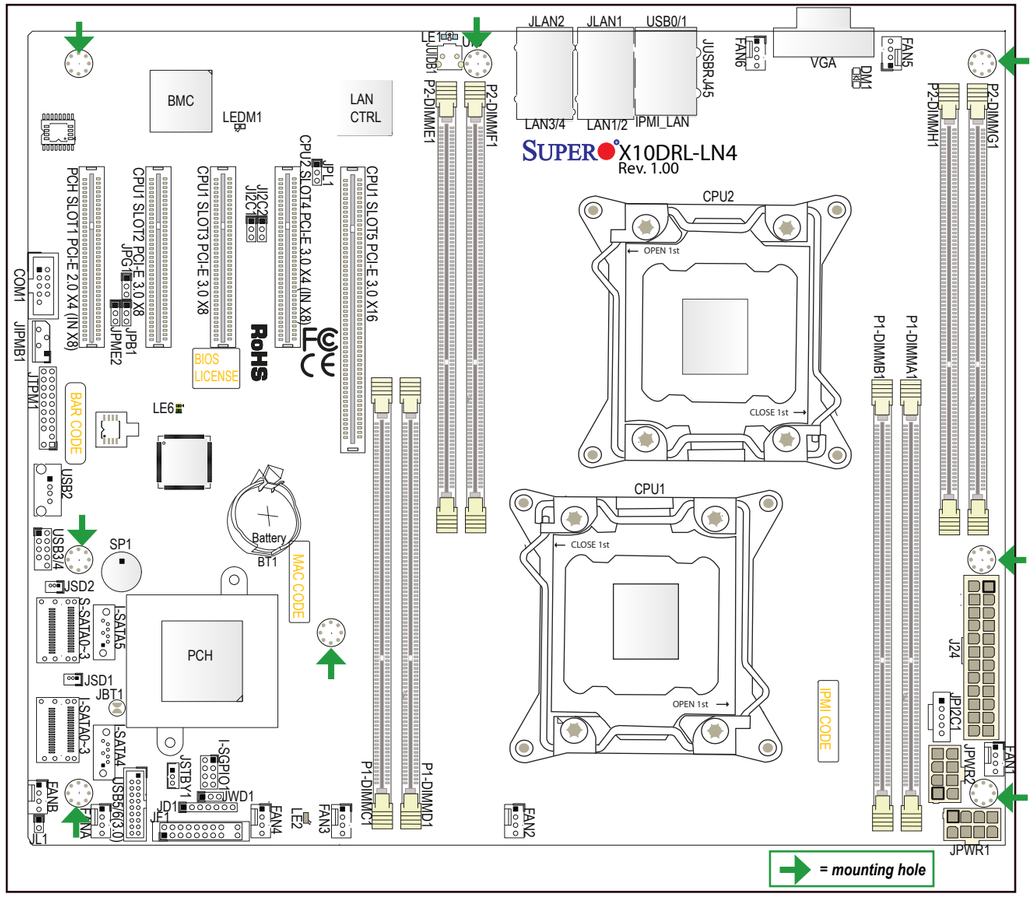

CPU Installation

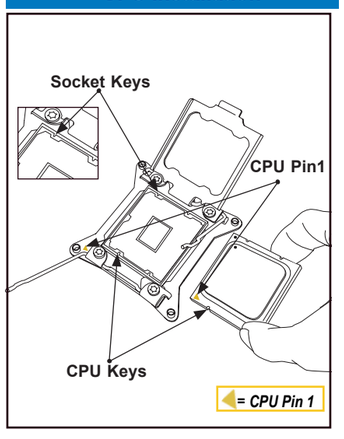

Heatsink Installation

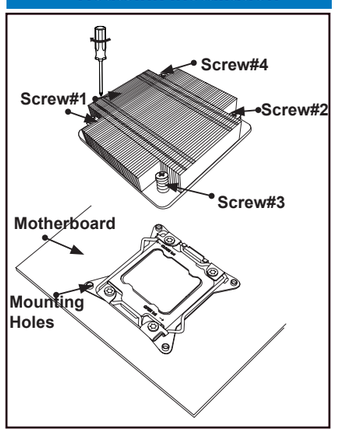

Front Panel Control (JF1)

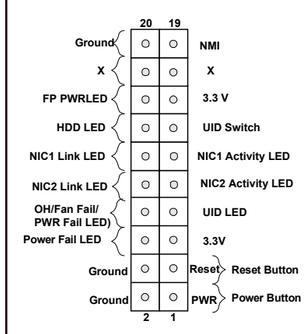

Jumpers and Connectors

Jumpers

Jumper	Description	Default Setting
JBT1	Clear CMOS Configuration	(See Chapter 2)
JI²C1/JI²C2	SMB to PCI-E Slots	Pins 2-3 (Disabled)
JPB1	BMC Enable/Disable	Pins 1-2 (Enabled)
JPG1	VGA Enable/Disable	Pins 1-2 (Enabled)
JPL1	GLAN1/2 & GLAN3/4 Enable/Disable	Pins 1-2 (Enabled)
JPME2	ME Manufacturing Mode Select	Pins 1-2 (Normal)
JWD1	Watch Dog Timer Enable/Disable	Pins 1-2 (Reset)

Connectors

Connector	Description
BT1	Onboard CMOS battery (See Chapter 3 for Used Battery Disposal)
COM1	Front accessible COM1 header
FAN 1-6, FAN A/B	CPU/system fan headers 1-6, A/B
J24	24-pin ATX main power connector (See the warning on Pg. 1-6.)
JD1	Speaker/power LED
JF1	Front panel control header
JIPMB1	4-pin external BMC I²C header (for an IPMI card)
JL1	Chassis intrusion header
JPI²C1	Power supply SMBus I²C header
JPWR1/JPWR2	12V 8-Pin power connectors (See Warning on Pg. 1-6.)
JSD1/JSD2	SATA DOM (Device on Module) power connectors 1/2
JSTBY1	Standby power connector
JTPM1	TPM (Trusted Platform Module)/Port 80 header
LAN1/LAN2 (JLAN1)	G-bit Ethernet (GLAN) ports 1/2 on the I/O backplane
LAN3/LAN4 (JLAN2)	G-bit Ethernet (GLAN) ports 3/4 on the I/O backplane
IPMI_LAN	IPMI_Dedicated LAN support by the Aspeed controller
I-SGPIO1	Seria_Link General Purpose I/O (SGPIO) header (for I-SATA4/5)
I-SATA 0-3	SATA 3.0 connector w/support of I-SATA 0-3
I-SATA 4/5	SATA 3.0 connectors w/power-pins built-in w/support of SuperDOMs(I-SATA4/I-SATA5)
S-SATA 0-3	SATA 3.0 connectors supported by Intel SCU (S-SATA 0-3)
SP1	Internal Speaker/Buzzer header
UID (JUIDB1)	Unit Identifier button
(BP) USB 0/1 (2.0)	Backpanel USB 2.0 connector for USB 0/1
(FP) USB 2 (2.0)	Front-accessible Type A USB 2.0 connector
(FP) USB 3/4 (2.0)	Front-accessible USB 2.0 header for USB connections 3/4
(FP) USB 5/6 (3.0)	Front-accessible USB 3.0 header for USB connections 5/6
VGA	Backpanel VGA port

LED Indicators

LED	Description	State	Status
LE1	Rear UID LED	Blue: On	Unit Identified
LE2	Onboard PWR LED	Green: On	System Power On
LE6	Power Good LED	Green: On	All onboard PWR: Ready
LEDM1	BMC Heartbeat LED	Green: Blinking	BMC Normal

***Note**: Refer to Chapter 1 of the user manual for detailed information on jumpers, connectors, and LED indicators.*

CPU Support

Dual Intel® E5-2600v3/v4 Series Processors (Socket R3-LGA 2011); each processor supports dual full-width Intel QuickPath Interconnect (QPI) links (of up to 9.6 GT/s one direction per QPI)

Note: E5-2600v4 requires Revision 2.0 BIOS (or higher).

Memory Support

The X10DRL-LN4 motherboard supports up to 1 TB of ECC DDR4 3DS LRDIMM or 512 GB of Registered (RDIMM)/Load Reduced (LRDIMM) ECC DDR4 2400/2133/1866/1600 MHz memory modules in eight DIMM slots. Memory speed support is dependent on the processors used in the system. For the latest memory updates, please refer to our website a at http://www.supermicro.com/products/motherboard.

Populating RDIMM/LRDIMM DDR4 Memory Modules

Type	Ranks Per DIMM and Data Width	DIMM Capacity (GB)		Speed (MT/s); Voltage (V); Slots per Channel (SPC) and DIMMs per Channel (DPC)	
				1 Slot per Channel (1DPC)	
				E5-2600 V3	E5-2600 V4
		4 Gb	8 Gb	1.2 V	1.2 V
RDIMM	SRx4	8 GB	16 GB	2133	2400
RDIMM	SRx8	4 GB	8 GB	2133	2400
RDIMM	DRx8	8 GB	16 GB	2133	2400
RDIMM	DRx4	16 GB	32 GB	2133	2400
LRDIMM	QRx4	32 GB	64 GB	2133	2400
LRDIMM 3DS	8Rx4	64 GB	128 GB	2133	2400

DIMM Memory Installation

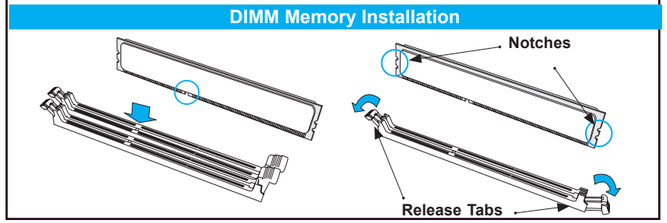

Back Panel I/O Connectors

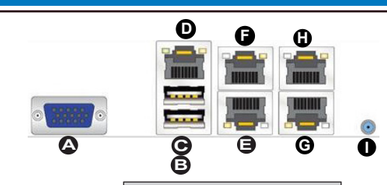

A. VGA Port
B. Back Panel USB 2.0 Port 0
C. Back Panel USB 2.0 Port 1
D. IPMI_Dedicated LAN
E. Gigabit LAN 1
F. Gigabit LAN 2
G. Gigabit LAN 3
H. Gigabit LAN 4
I. UID Button

***Note**: Graphics shown in this quick reference guide are for illustration only. Your components may or may not look exactly the same as the drawings shown in this guide.*

© 2018 Supermicro Computer Inc. All rights reserved. Reproduction of this document whether in part or in whole is strictly prohibited without Supermicro's written consent. All Trademarks are property of their respective entities. All information provided is deemed accurate at the time of printing; however, it is not guaranteed.

MNL-1878-QRG-10a