SUPERO®

SUPERSERVER

6017B-NTF

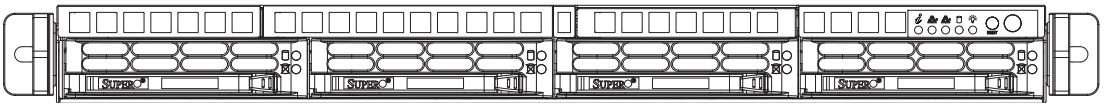

USER'S MANUAL

1.0

FCC Statement: This equipment has been tested and found to comply with the limits for a Class A digital device pursuant to Part 15 of the FCC Rules. These limits are designed to provide reasonable protection against harmful interference when the equipment is operated in a commercial environment. This equipment generates, uses, and can radiate radio frequency energy and, if not installed and used in accordance with the manufacturer's instruction manual, may cause harmful interference with radio communications. Operation of this equipment in a residential area is likely to cause harmful interference, in which case you will be required to correct the interference at your own expense.

California Best Management Practices Regulations for Perchlorate Materials: This Perchlorate warning applies only to products containing CR (Manganese Dioxide) Lithium coin cells. "Perchlorate Material-special handling may apply. See www.dtsc.ca.gov/hazardouswaste/perchlorate"

WARNING: Handling of lead solder materials used in this product may expose you to lead, a chemical known to the State of California to cause birth defects and other reproductive harm.

Manual Revision 1.0
Release Date: September 3, 2012

Printed in the United States of America

Preface

About This Manual

This manual is written for professional system integrators and PC technicians. It provides information for the installation and use of the SuperServer 6017B-NTF. Installation and maintenance should be performed by experienced technicians only.

The SuperServer 6017B-NTF is a high-end server based on the SC813T-600UB 1U rackmount chassis and the Super X9DBU-iF serverboard.

Manual Organization

Chapter 1: Introduction

The first chapter provides a checklist of the main components included with the server system and describes the main features of the X9DBU-iF serverboard and the SC813T-600UB chassis.

Chapter 2: Server Installation

This chapter describes the steps necessary to install the SuperServer 6017B-NTF into a rack and check out the server configuration prior to powering up the system. If your server was ordered without processor and memory components, this chapter will refer you to the appropriate sections of the manual for their installation.

Chapter 3: System Interface

Refer here for details on the system interface, which includes the functions and information provided by the control panel on the chassis as well as other LEDs located throughout the system.

Chapter 4: System Safety

You should thoroughly familiarize yourself with this chapter for a general overview of safety precautions that should be followed when installing and servicing the SuperServer 6017B-NTF.

Chapter 5: Advanced Serverboard Setup

Chapter 5 provides detailed information on the X9DBU-iF serverboard, including the locations and functions of connections, headers and jumpers. Refer to this chapter when adding or removing processors or main memory and when reconfiguring the serverboard.

Chapter 6: Advanced Chassis Setup

Refer to Chapter 6 for detailed information on the SC813T-600UB server chassis. You should follow the procedures given in this chapter when installing, removing or reconfiguring SATA or peripheral drives and when replacing system power supply modules and cooling fans.

Chapter 7: BIOS

The BIOS chapter includes an introduction to BIOS and provides detailed information on running the CMOS Setup Utility.

Appendix A: BIOS Error Beep Codes

Appendix B: System Specifications

Notes

Table of Contents

Chapter 1

Introduction

1-1 Overview

The SuperServer 6017B-NTF is a high-end server comprised of two main subsystems: the SC813T-600UB 1U server chassis and the X9DBU-iF dual processor serverboard. Please refer to our web site for information on operating systems that have been certified for use with the system (www.supermicro.com).

In addition to the serverboard and chassis, various hardware components have been included with the 6017B-NTF, as listed below:

- Two blower fans (FAN-0135L4)
- Two passive CPU heatsinks (one SNK-P0037P and one SNK-P0041)
- One air shroud (MCP-310-18010-0N)
- One riser card (RSC-R1UU-E8E16)
- SATA Accessories
  One SATA backplane (BPN-SAS-815T)
  Four drive carriers (MCP-220-00075-0B)
  Four SATA cables (CBL-0186L)
- One rackmount kit (MCP-290-00106-0N + MCP-290-00110-0N)
- One CD containing drivers and utilities
- SuperServer 6017B-NTF User's Manual or Quick Reference Guide

1-2 Serverboard Features

At the heart of the SuperServer 6017B-NTF lies the X9DBU-iF, a dual processor serverboard based on the Intel® C602 chipset. Below are the main features of the X9DBU-iF. (See Figure 1-1 for a block diagram of the chipset).

Processors

The X9DBU-iF supports single or dual two Intel® E5-2400 Series processors in LGA1356 sockets (Socket B2). Please refer to our web site for a complete listing of supported processors (www.supermicro.com).

Memory

The X9DBU-iF has twelve 240-pin DIMM sockets that can support up to 384 GB of registered ECC RDIMM/RLDIMM or up to 96 GB of ECC/non-ECC UDIMM DDR3-1600/1333/1066/800 memory. Please refer to Chapter 5 for installing memory.

UIO

The X9DBU-iF is a specially-designed serverboard that features Supermicro's UIO (Universal I/O) technology. UIO serverboards have a PCI Express x8 slot that can support any one of several types of UIO card types to add SAS ports, additional LAN ports, etc. to the serverboard. This allows the user to tailor the serverboard to their own needs.

Note: the server does not come with a UIO card installed.

Serial ATA

An on-chip (PCH) SATA controller is integrated into the X9DBU-iF to provide a 10-port (two SATA 3.0 and eight SATA 2.0), 3 Gb/sec SATA subsystem, which is RAID 0, 1, 5 and 10 supported. The SATA drives are hot-swappable units.

Onboard Controllers/Ports

The color-coded I/O ports include one COM port, a VGA (monitor) port, two USB 2.0 ports, PS/2 mouse and keyboard ports, two gigabit Ethernet ports and a dedicated IPMI LAN port.

Graphics Controller

The X9DBU-iF features an integrated Matrox G200eW graphics chip, which includes 8 MB of DDR2 memory.

1-3 Server Chassis Features

The following is a general outline of the main features of the SC813T-600UB chassis.

System Power

The SC813T-600UB chassis includes a single 600W power supply. Power must be removed from the system when removing the power supply. See Chapter 6 for details.

SATA Subsystem

For the 6017B-NTF, the SC813T-600UB chassis was designed to support four SATA hard drives, which are hot-swappable units.

Control Panel

The SC813T-600UB's control panel provides important system monitoring and control information. LEDs indicate power on, network activity, hard disk drive activity and system overheat conditions. The control panel also includes a main power button and a system reset button.

Cooling System

The SC813T-600UB chassis has an innovative cooling design that features two 10-cm high-performance blower fans. Each of these fans plug into a chassis fan header on the serverboard.

Fan speed may be controlled according to temperature via IPMI.

Figure 1-1. Intel C602 Chipset:
System Block Diagram

Note: This is a general block diagram. Please see Chapter 5 for details.

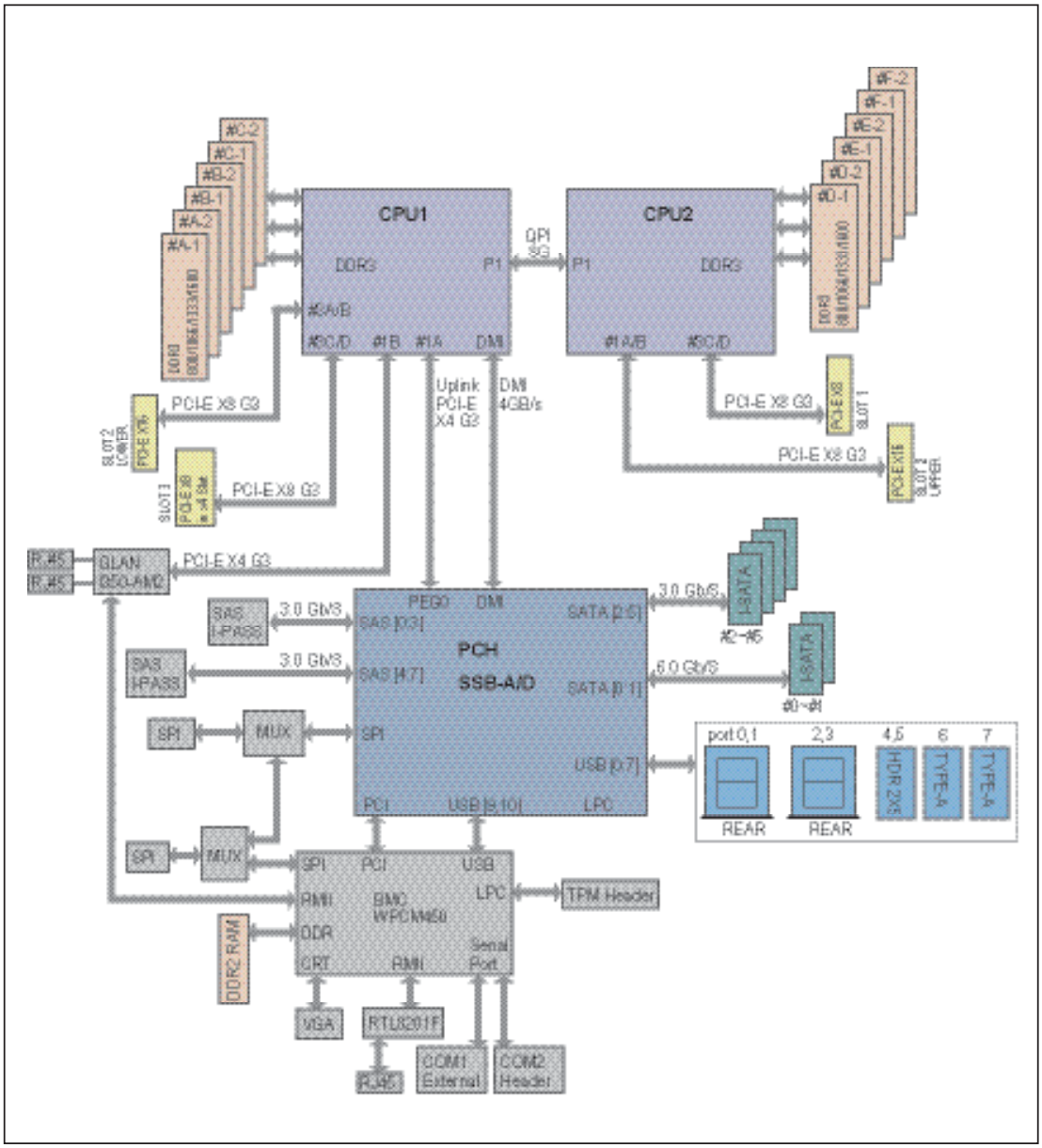

1-4 Contacting Supermicro

Headquarters

Address:	Super Micro Computer, Inc.
	980 Rock Ave.
	San Jose, CA 95131 U.S.A.
Tel:	+1 (408) 503-8000
Fax:	+1 (408) 503-8008
Email:	marketing@supermicro.com (General Information)
	support@supermicro.com (Technical Support)
Web Site:	www.supermicro.com

Europe

Address:	Super Micro Computer B.V.
	Het Sterrenbeeld 28, 5215 ML
	's-Hertogenbosch, The Netherlands
Tel:	+31 (0) 73-6400390
Fax:	+31 (0) 73-6416525
Email:	sales@supermicro.nl (General Information)
	support@supermicro.nl (Technical Support)
	rma@supermicro.nl (Customer Support)

Asia-Pacific

Address:	Super Micro Computer, Inc.
	4F, No. 232-1, Liancheng Rd.
	Chung-Ho Dist., New Taipei City 235
	Taiwan
Tel:	+886-(2) 8226-3990
Fax:	+886-(2) 8226-3991
Web Site:	www.supermicro.com.tw
Technical Support:	
Email:	support@supermicro.com.tw
Tel:	886-2-8228-1366, ext.132 or 139

Notes

Chapter 2

Server Installation

2-1 Overview

This chapter provides a quick setup checklist to get your SuperServer 6017B-NTF up and running. Following the steps in the order given should enable you to have the system operational within a minimal amount of time. This quick setup assumes that your 6017B-NTF system has come to you with the processor and memory pre-installed. If your system is not already fully integrated with a serverboard, processor, system memory etc., please turn to the chapter or section noted in each step for details on installing specific components.

2-2 Unpacking the System

You should inspect the box the SuperServer 6017B-NTF was shipped in and note if it was damaged in any way. If the server itself shows damage, you should file a damage claim with the carrier who delivered it.

Decide on a suitable location for the rack unit that will hold the SuperServer 6017B-NTF. It should be situated in a clean, dust-free area that is well ventilated. Avoid areas where heat, electrical noise and electromagnetic fields are generated. You will also need it placed near a grounded power outlet. Read the Rack and Server Precautions in the next section.

2-3 Preparing for Setup

The box the SuperServer 6017B-NTF was shipped in should include two sets of rail assemblies, six rail mounting brackets and the mounting screws you will need to install the system into the rack. Follow the steps in the order given to complete the installation process in a minimal amount of time. Please read this section in its entirety before you begin the installation procedure outlined in the sections that follow.

Choosing a Setup Location

- Leave enough clearance in front of the rack to enable you to open the front door completely (~25 inches) and approximately 30 inches of clearance in the back of the rack to allow for sufficient airflow and ease in servicing.This product is for installation only in a Restricted Access Location (dedicated equipment rooms, service closets and the like).

- This product is not suitable for use with visual display work place devices acccording to §2 of the the German Ordinance for Work with Visual Display Units.

Warnings and Precautions!

Rack Precautions

- Ensure that the leveling jacks on the bottom of the rack are fully extended to the floor with the full weight of the rack resting on them.

- In single rack installation, stabilizers should be attached to the rack. In multiple rack installations, the racks should be coupled together.

- Always make sure the rack is stable before extending a component from the rack.

- You should extend only one component at a time - extending two or more simultaneously may cause the rack to become unstable.

Server Precautions

- Review the electrical and general safety precautions in Chapter 4.

- Determine the placement of each component in the rack *before* you install the rails.

- Install the heaviest server components on the bottom of the rack first, and then work up.

- Use a regulating uninterruptible power supply (UPS) to protect the server from power surges, voltage spikes and to keep your system operating in case of a power failure.

- Allow the hot plug SATA drives and power supply modules to cool before touching them.
- Always keep the rack's front door and all panels and components on the servers closed when not servicing to maintain proper cooling.

Rack Mounting Considerations

Ambient Operating Temperature

If installed in a closed or multi-unit rack assembly, the ambient operating temperature of the rack environment may be greater than the ambient temperature of the room. Therefore, consideration should be given to installing the equipment in an environment compatible with the manufacturer’s maximum rated ambient temperature (Tmra).

Reduced Airflow

Equipment should be mounted into a rack so that the amount of airflow required for safe operation is not compromised.

Mechanical Loading

Equipment should be mounted into a rack so that a hazardous condition does not arise due to uneven mechanical loading.

Circuit Overloading

Consideration should be given to the connection of the equipment to the power supply circuitry and the effect that any possible overloading of circuits might have on overcurrent protection and power supply wiring. Appropriate consideration of equipment nameplate ratings should be used when addressing this concern.

Reliable Ground

A reliable ground must be maintained at all times. To ensure this, the rack itself should be grounded. Particular attention should be given to power supply connections other than the direct connections to the branch circuit (i.e. the use of power strips, etc.).

2-4 Rack Mounting Instructions

This section provides information on installing the SC813T-600UB chassis into a rack unit. There are a variety of rack units on the market, which may mean the assembly procedure will differ slightly. You should also refer to the installation instructions that came with the rack unit you are using.

Note: This rail will fit a rack between 26" and 33.5" deep.

Identifying the Sections of the Rack Rails

The chassis package includes two rack rail assemblies in the rack mounting kit. Each assembly consists of two sections: an inner rail that secures directly to the chassis, and an outer rail that secures directly to the rack itself.

Figure 2-1. Identifying the Sections of the Rack Rails (right side rail shown)

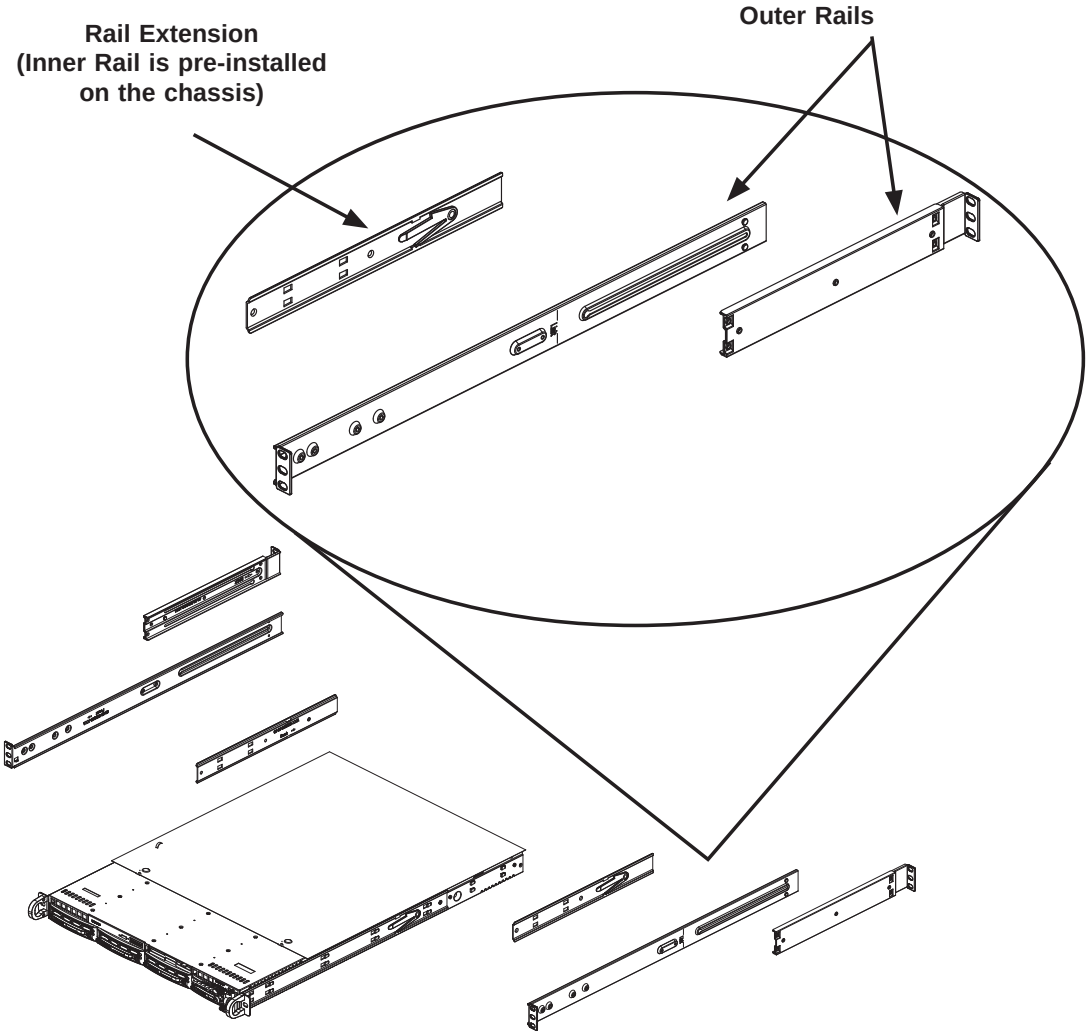

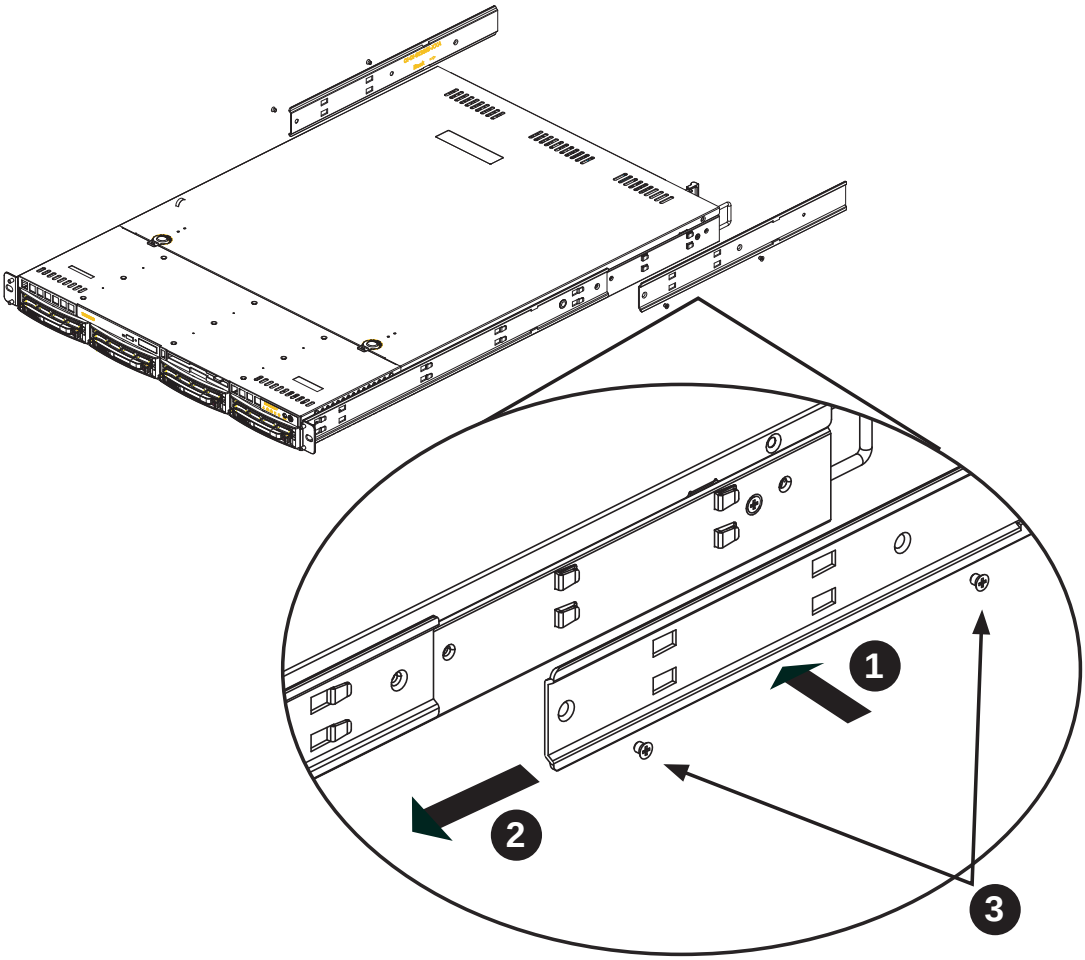

Figure 2-2. Identifying the Sections of the Rack Rails (right side rail shown)

Inner Rail Extension

The SC813T-600UB chassis includes a set of inner rails which are in two sections: inner rails and inner rail extensions. The inner rails are pre-attached and do not interfere with normal use of the chassis if you decide not to use a server rack. Attach the inner rail extension to stabilize the chassis within the rack.

Installing the Inner Rails

1. Place the inner rail extensions on the side of the chassis aligning the hooks of the chassis with the inner rail extension holes. Make sure the inner rail extension faces "outward" just like the pre-attached inner rail.

2. Slide the extension toward the front of the chassis.

3. Secure the chassis with 2 screws as illustrated.

4. Repeat steps 1-3 for the other inner rail extension.

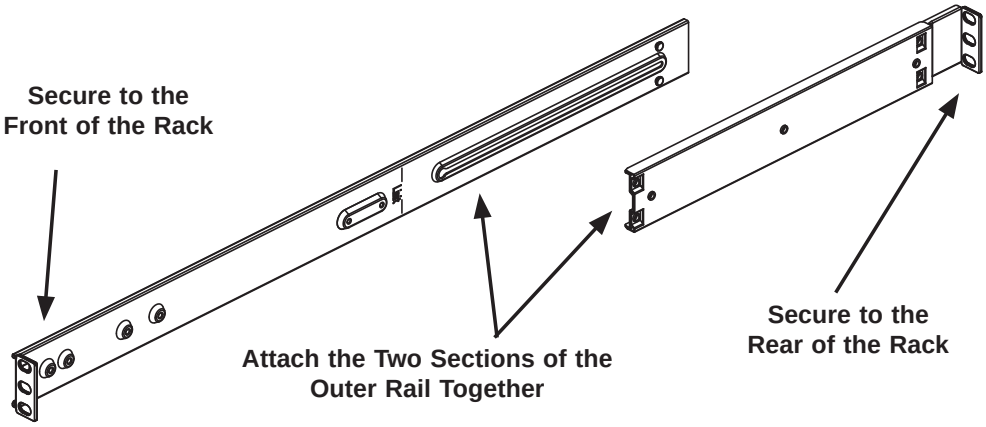

Figure 2-3. Assembling the Outer Rails

Installing the Outer Rails to the Rack

1. Attach the longer section of the outer rail to the outside of the shorter section of the outer rail. You must align the pins with the slides. Both ends of the outer rail must face the same direction in order to be secured to the rack.

2. Adjust both sections of the outer rail to the proper length so that the rail fits snugly within the rack.

3. Secure the longer section of the outer rail to the of the rack with two M5 screws and the shorter section to the rear side of the rack with two M5 screws.

4. Repeat steps 1-4 for the remaining outer rail.

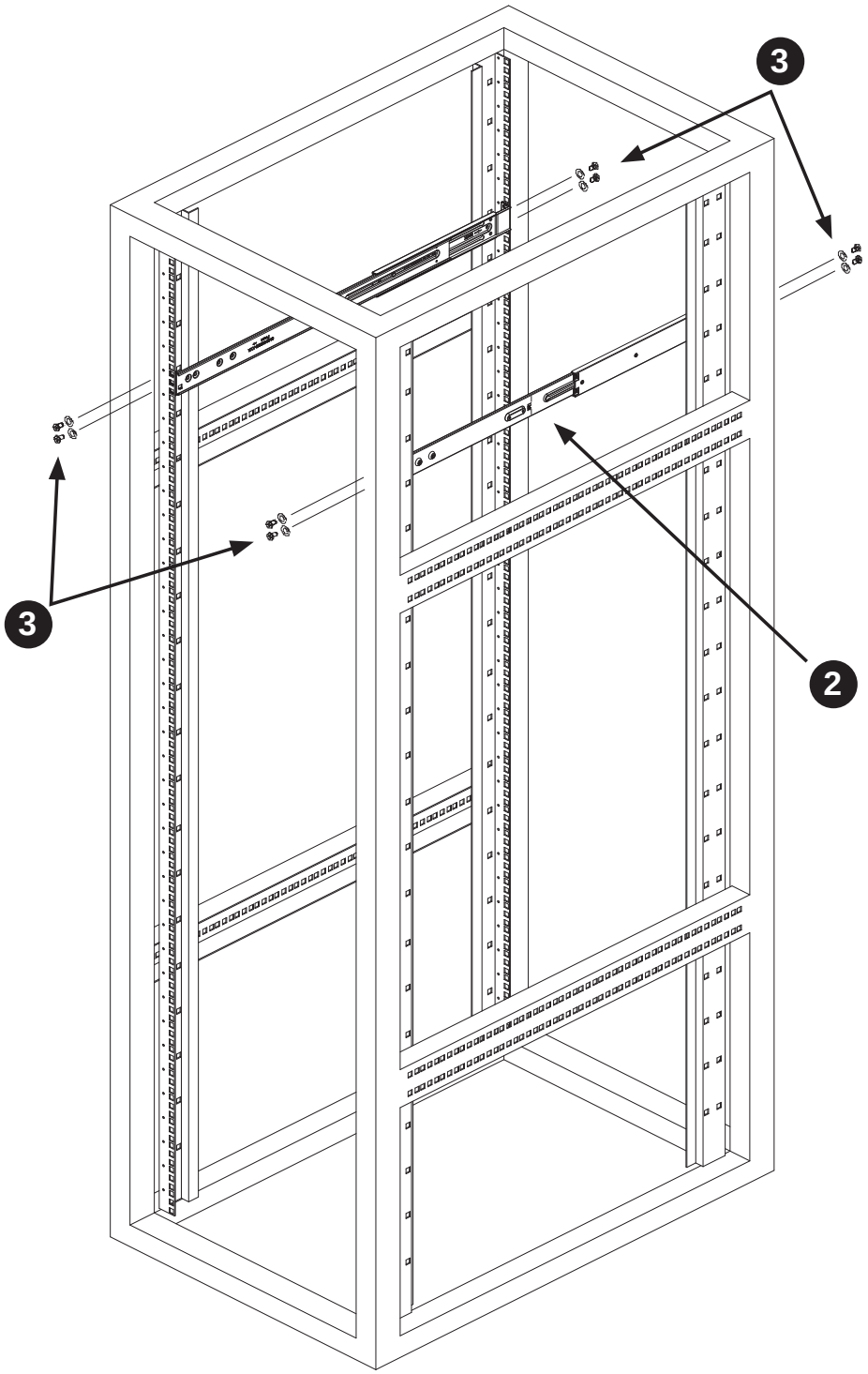

Figure 2-4. Installing the Outer Rails to the Server Rack

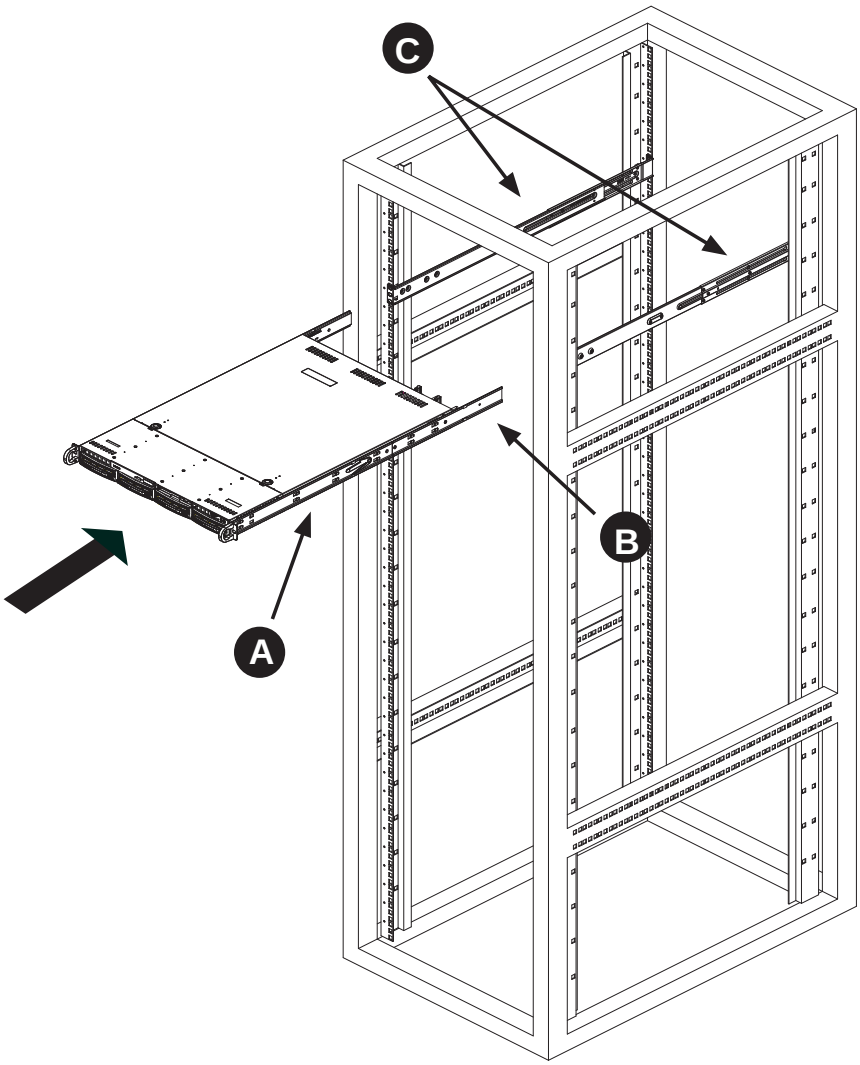

Figure 2-5. Installing the Rack Rails

Installing the Chassis into a Rack

1. Confirm that chassis includes the inner rails (A) and rail extensions (B). Also, confirm that the outer rails (C) are installed on the rack.

2. Line chassis rails (A and B) with the front of the rack rails (C).

3. Slide the chassis rails into the rack rails, keeping the pressure even on both sides (you may have to depress the locking tabs when inserting). When the server has been pushed completely into the rack, you should hear the locking tabs "click" into the locked position.

4. (Optional) Insert and tighten the thumbscrews that hold the front of the server to the rack.

Installing the Chassis into a Telco rack

To install the chassis into a Telco type rack, use two L-shaped brackets on either side of the chassis (four total). First, determine how far follow the server will extend out the front of the rack. Larger chassis should be positioned to balance the weight between front and back. If a bezel is included on your server, remove it. Then attach the two front brackets to each side of the chassis, then the two rear brackets positioned with just enough space to accommodate the width of the telco rack. Finish by sliding the chassis into the rack and tightening the brackets to the rack.

Figure 2-6. Installing the Server into a Telco Rack

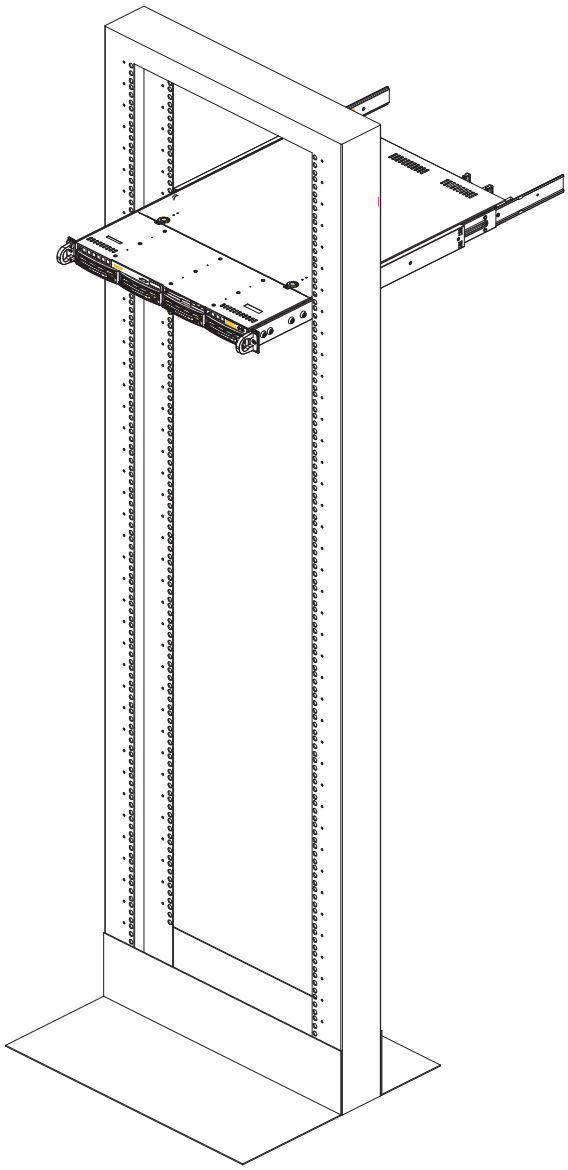

Note: Figures are for illustrative purposes only. Servers should always be installed into racks from the bottom up.

Notes

Chapter 3

System Interface

3-1 Overview

There are several LEDs on the control panel as well as others on the hard drive carriers to keep you constantly informed of the overall status of the system as well as the activity and health of specific components. There are also two buttons on the chassis control panel and an on/off switch on the power supply. This chapter explains the meanings of all LED indicators and the appropriate response you may need to take.

3-2 Control Panel Buttons

There are two push-buttons located on the front of the chassis: a reset button and a power on/off button.

Reset

The reset button reboots the system.

Power

This is the main power button, which is used to apply or turn off the main system power. Turning off system power with this button removes the main power but keeps standby power supplied to the system.

3-3 Control Panel LEDs

The control panel located on the front of the SC813T-600UB chassis has five LEDs. These LEDs provide you with critical information related to different parts of the system. This section explains what each LED indicates when illuminated and any corrective action you may need to take.

Information LED

This LED will be solid blue when the UID function has been activated. When this LED flashes red, it indicates a fan failure. When red continuously it indicates an overheat condition, which may be caused by cables obstructing the airflow in the system or the ambient room temperature being too warm. Check the routing of the cables and make sure all fans are present and operating normally. You should also check to make sure that the chassis covers are installed. Finally, verify that the heatsinks are installed properly (see Chapter 5). This LED will remain flashing or on as long as the indicated condition exists.

NIC1

Indicates network activity on LAN1 when flashing.

NIC2

Indicates network activity on LAN2 when flashing.

HDD

Channel activity for all HDDs. This light indicates hard drive activity on the 6017B-NTF when flashing.

Power

Indicates power is being supplied to the system's power supply units. This LED should normally be illuminated when the system is operating.

3-4 Hard Drive Carrier LEDs

Each drive carrier has two LEDs.

- **Green:** When illuminated, the green LED on the drive carrier indicates drive activity. A connection to the backplane enables this LED to blink on and off when that particular drive is being accessed.

- **Red:** The red LED to indicate a drive failure. If one of the drives fails, you should be notified by your system management software. Please refer to Chapter 6 for instructions on replacing failed drives.

Notes

Chapter 4

System Safety

4-1 Electrical Safety Precautions

Basic electrical safety precautions should be followed to protect yourself from harm and the SuperServer 6017B-NTF from damage:

- Be aware of the locations of the power on/off switch on the chassis as well as the room's emergency power-off switch, disconnection switch or electrical outlet. If an electrical accident occurs, you can then quickly remove power from the system.

- Do not work alone when working with high voltage components.

- Power should always be disconnected from the system when removing or installing main system components, such as the serverboard, memory modules and CD/DVD drive. When disconnecting power, you should first power down the system with the operating system first and then unplug the power cords of all the power supply units in the system.

- When working around exposed electrical circuits, another person who is familiar with the power-off controls should be nearby to switch off the power if necessary.

- Use only one hand when working with powered-on electrical equipment. This is to avoid making a complete circuit, which will cause electrical shock. Use extreme caution when using metal tools, which can easily damage any electrical components or circuit boards they come into contact with.

- Do not use mats designed to decrease static electrical discharge as protection from electrical shock. Instead, use rubber mats that have been specifically designed as electrical insulators.

- The power supply power cords must include a grounding plug and must be plugged into grounded electrical outlets.

- This product may be connected to an IT power system. In all cases, make sure that the unit is also reliably connected to Earth (ground).

- Serverboard Battery: **CAUTION** - There is a danger of explosion if the onboard battery is installed upside down, which will reverse its polarites (see Figure 4-1). This battery must be replaced only with the same or an equivalent type recommended by the manufacturer (CR2032). Dispose of used batteries according to the manufacturer's instructions.

- DVD-ROM Laser: **CAUTION** - this server may have come equipped with a DVD-ROM drive. To prevent direct exposure to the laser beam and hazardous radiation exposure, do not open the enclosure or use the unit in any unconventional way.

- Mainboard replaceable soldered-in fuses: Self-resetting PTC (Positive Temperature Coefficient) fuses on the mainboard must be replaced by trained service technicians only. The new fuse must be the same or equivalent as the one replaced. Contact technical support for details and support.

4-2 General Safety Precautions

Follow these rules to ensure general safety:

- Keep the area around the 6017B-NTF clean and free of clutter.

- The barebone 6017B-NTF weighs approximately 22 lbs (~10 kg). When lifting the system, two people at either end should lift slowly with their feet spread out to distribute the weight. Always keep your back straight and lift with your legs.

- Place the chassis top cover and any system components that have been removed away from the system or on a table so that they won't accidentally be stepped on.

- While working on the system, do not wear loose clothing such as neckties and unbuttoned shirt sleeves, which can come into contact with electrical circuits or be pulled into a cooling fan.

- Remove any jewelry or metal objects from your body, which are excellent metal conductors that can create short circuits and harm you if they come into contact with printed circuit boards or areas where power is present.

- After accessing the inside of the system, close the system back up and secure it to the rack unit with the retention screws after ensuring that all connections have been made.

4-3 ESD Precautions

Electrostatic Discharge (ESD) is generated by two objects with different electrical charges coming into contact with each other. An electrical discharge is created to neutralize this difference, which can damage electronic components and printed circuit boards. The following measures are generally sufficient to neutralize this difference before contact is made to protect your equipment from ESD:

- Use a grounded wrist strap designed to prevent static discharge.

- Keep all components and printed circuit boards (PCBs) in their antistatic bags until ready for use.

- Touch a grounded metal object before removing the board from the antistatic bag.

- Do not let components or PCBs come into contact with your clothing, which may retain a charge even if you are wearing a wrist strap.

- Handle a board by its edges only; do not touch its components, peripheral chips, memory modules or contacts.

- When handling chips or modules, avoid touching their pins.

- Put the serverboard and peripherals back into their antistatic bags when not in use.

- For grounding purposes, make sure your computer chassis provides excellent conductivity between the power supply, the case, the mounting fasteners and the serverboard.

4-4 Operating Precautions

Care must be taken to assure that the chassis cover is in place when the 6017B-NTF is operating to assure proper cooling. Out of warranty damage to the system can occur if this practice is not strictly followed.

Figure 4-1. Installing the Onboard Battery

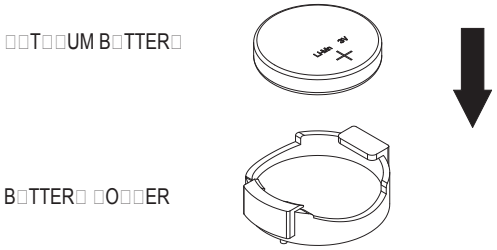

Please handle used batteries carefully. Do not damage the battery in any way; a damaged battery may release hazardous materials into the environment. Do not discard a used battery in the garbage or a public landfill. Please comply with the regulations set up by your local hazardous waste management agency to dispose of your used battery properly.

Chapter 5

Advanced Serverboard Setup

This chapter covers the steps required to install processors and heatsinks to the X9DBU-iF serverboard, connect the data and power cables and install add-on cards. All serverboard jumpers and connections are described and a layout and quick reference chart are included in this chapter. Remember to close the chassis completely when you have finished working on the serverboard to protect and cool the system sufficiently.

5-1 Handling the Serverboard

Static electrical discharge can damage electronic components. To prevent damage to printed circuit boards, it is important to handle them very carefully (see Chapter 4). Also note that the size and weight of the serverboard can cause it to bend if handled improperly, which may result in damage. To prevent the serverboard from bending, keep one hand under the center of the board to support it when handling.

The following measures are generally sufficient to protect your equipment from static discharge.

Precautions

- Use a grounded wrist strap designed to prevent static discharge.
- Touch a grounded metal object before removing any board from its antistatic bag.
- Handle a board by its edges only; do not touch its components, peripheral chips, memory modules or gold contacts.
- When handling chips or modules, avoid touching their pins.
- Put the serverboard, add-on cards and peripherals back into their antistatic bags when not in use.

Unpacking

The serverboard is shipped in antistatic packaging to avoid static damage. When unpacking the board, make sure the person handling it is static protected.

5-2 Processor and Heatsink Installation

When handling the processor, avoid placing direct pressure on the label area of the fan. Also, do not place the serverboard on a conductive surface, which can damage the BIOS battery and prevent the system from booting up.

Notes:

- Always connect the power cord last and always remove it before adding, removing or changing any hardware components. Make sure that you install the processor into the CPU socket before you install the CPU heatsink.
- If you buy a CPU separately, make sure that you use an Intel-certified multi-directional heatsink only.
- Make sure to install the serverboard into the chassis before you install the CPU heatsinks.
- When receiving a serverboard without a processor pre-installed, make sure that the plastic CPU socket cap is in place and none of the socket pins are bent; otherwise, contact your retailer immediately.
- Refer to the Supermicro web site for updates on CPU support.

Installing an LGA 1356 Processor

1. Press the socket clip to release the load plate covering the CPU socket from its locked position.
2. Gently lift the socket clip to open the load plate.
3. Hold the plastic cap at its north and south center edges to remove it from the CPU socket.
4. After removing the plastic cap, hold the CPU at the north and south center edges with your thumb and index finger,.

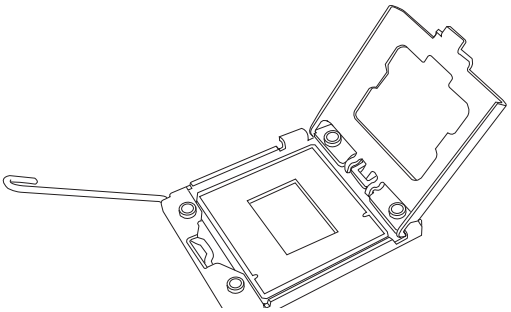

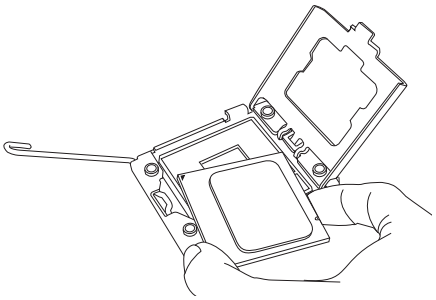

5. Align the CPU key, which is a semi-circle cutout, against the socket key, which is the notch below the gold color dot on the side of the socket.

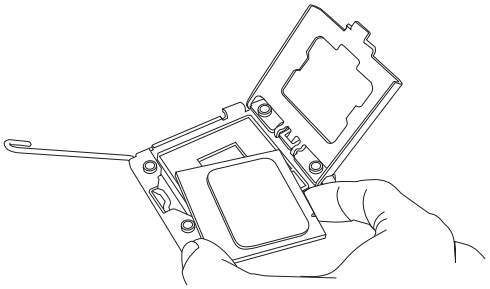

6. Align pin 1 of the CPU against pin 1 of the CPU socket.

7. Once both CPU and the socket are aligned, carefully lower the CPU straight down into the socket. (To avoid damaging the CPU or the socket, do not rub the CPU against the surface of the socket or its pins.)

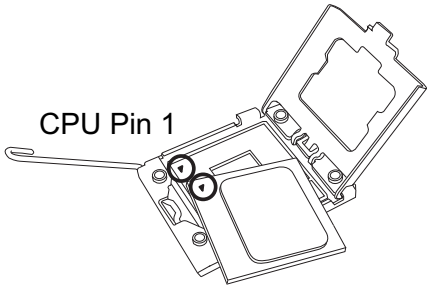

8. With the CPU inside the socket, inspect the four corners of the CPU to make sure that the CPU is properly installed.

9. Once the CPU is securely seated on the socket, lower the CPU load plate to the socket.

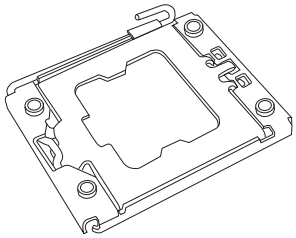

10. Use your thumb to gently push the socket clip down to the clip lock.

Warning: Please save the plastic cap. The serverboard must be shipped with the plastic cap properly installed to protect the CPU socket pins. Shipment without the plastic cap properly installed will cause damage to the socket pins.

Installation and Removal of the Heatsink

Installing the Heatsink

1. Do not apply any thermal grease to the heatsink or the CPU die; the required amount has already been applied.

2. Place the heatsink on top of the CPU so that the four mounting holes are aligned with those on the retention mechanism.

3. Screw in two diagonal screws (i.e. the #1 and the #2 screws) until just snug. (Do not over-tighten the screws, which may damage the CPU.) Finish the installation by fully tightening all four screws.

Uninstalling the Heatsink

Note: We do not recommend removing the CPU or the heatsink. However, if you do need to uninstall the heatsink, please follow these instructions to avoid damaging the CPU or the CPU socket.

1. Unscrew and remove the heatsink screws in the sequence shown in the picture on the right.

2. Hold the heatsink as shown in the picture on the right and gently wriggle to loosen it from the CPU. (Do not use excessive force when doing this!)

3. Once the heatsink is loosened, remove it from the CPU socket.

4. Clean the surface of the CPU and heatsink to remove the old thermal grease. Reapply the proper amount of grease before re-installing the heatsink.

Figure 5-2. Front Control Panel Header Pins (JF1)

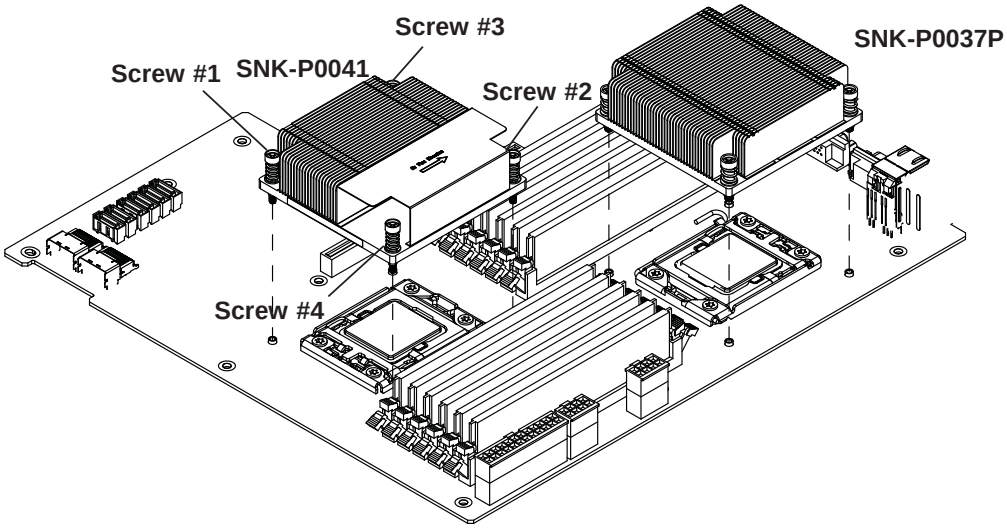

5-3 Connecting Cables

Now that the processors are installed, the next step is to connect the cables to the serverboard. These include the data (ribbon) cables for the peripherals and control panel and the power cables.

Connecting Data Cables

The cables used to transfer data from the peripheral devices have been carefully routed in preconfigured systems to prevent them from blocking the flow of cooling air that moves through the system from front to back. If you need to disconnect any of these cables, you should take care to reroute them as they were originally after reconnecting them (make sure the red wires connect to the pin 1 locations). If you are configuring the system, keep the airflow in mind when routing the cables.

The following data cables (with their connector locations noted) should be connected. See the serverboard layout diagram in this chapter for connector locations.

- SATA cables (I-SATA0-3)
- Control Panel cable (JF1, see next page)

Connecting Power Cables

The X9DBU-iF has a 24-pin primary power supply connector designated "JPW1" for connection to the ATX power supply. Connect the appropriate connector from the power supply to JPW1 to supply power to the serverboard. See the Connector Definitions section in this chapter for power connector pin definitions.

In addition, your power supply must be connected to the connectors at JPW2, JPW3 and JPW4.

Connecting the Control Panel

JF1 contains header pins for various front control panel connectors. See Figure 5-2 for the pin locations of the various front control panel buttons and LED indicators. Even and odd numbered pins are on opposite sides of each header.

All JF1 wires have been bundled into single keyed ribbon cable to simplify their connection. The red wire in the ribbon cable plugs into pin 1 of JF1. Connect the other end of the cable to the Control Panel printed circuit board, located just behind the system status LEDs in the chassis.

See the Connector Definitions section in this chapter for details and pin descriptions of JF1.

Figure 5-2. Front Control Panel Header Pins (JF1)

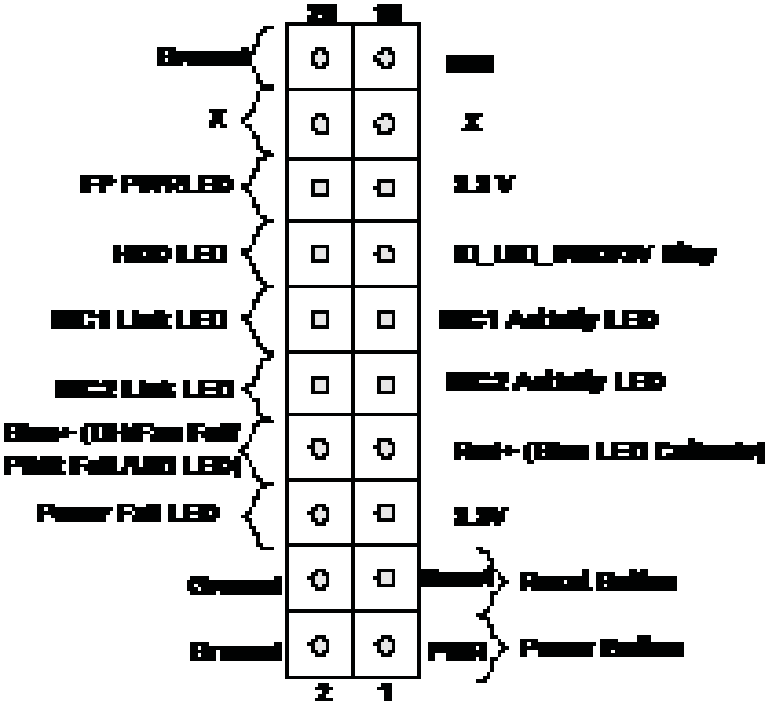

5-4 I/O Ports

The I/O ports are color coded in conformance with the PC 99 specification. See Figure 5-3 below for the colors and locations of the various I/O ports.

Figure 5-3. Rear Panel I/O Ports

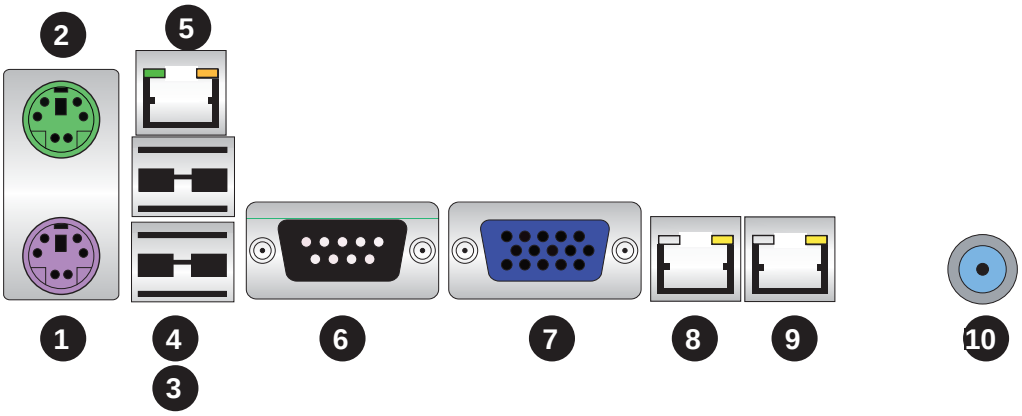

Rear I/O Ports	
1. Keyboard	6. COM1
2. PS/2 Mouse	7. VGA Port
3. USB0	8. LAN1
4. USB1	9. LAN2
5. IPMI LAN	10. UID Button

5-5 Installing Memory

Note: Check the Supermicro web site for recommended memory modules.

CAUTION

Exercise extreme care when installing or removing DIMM modules to prevent any possible damage.

Installing DIMMs

1. Insert the desired number of DIMMs into the memory slots, starting with slot P1-DIMMA1. For best performance, install memory modules of the same type and same speed in the slots as indicated in the tables below.

2. Insert each DIMM vertically into its slot. Pay attention to the notch at the bottom of the module to prevent inserting the DIMM incorrectly (see Figure 5-4).

3. Gently press down on the DIMM module until it snaps into place in the slot. Repeat for all modules

Memory Support

The X9DBU-iF has 12 slots that support up to 384 GB of registered ECC RDIMM/RLDIMM or up to 96 GB of ECC/non-ECC UDIMM DDR3-1600/1333/1066/800 memory.

Note: Memory speed support may depend on the type of CPU used.

Figure 5-4. Installing DIMM into Slot

To Install: Insert module vertically and press down until it snaps into place. Pay attention to the alignment notch at the bottom.

To Remove:
Use your thumbs to gently push the release tabs near both ends of the module. This should release it from the slot.

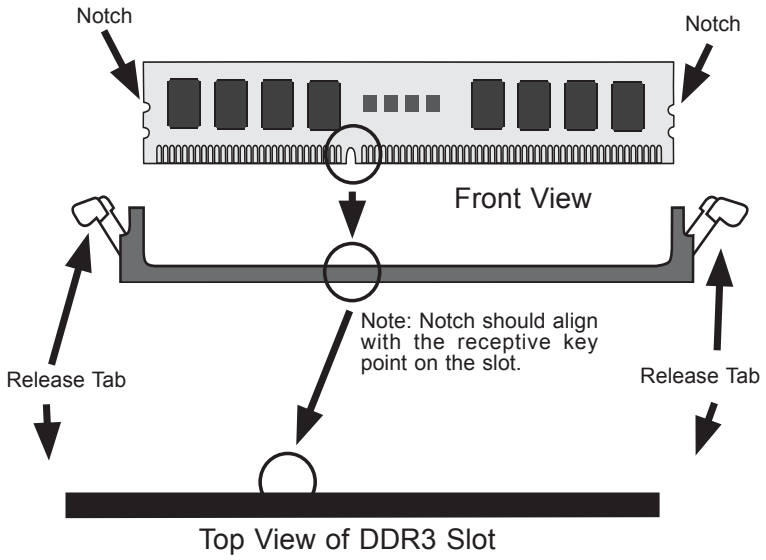

Processor & Memory Module Population Configuration

For memory to work properly, follow the tables below for memory installation.

Processors and their Corresponding Memory Modules						
CPU#	**Corresponding DIMM Modules**					
CPU 1	P1-DIMMA1	P1-DIMMA2	P1-DIMMB1	P1-DIMMB2	P1-DIMMC1	P1-DIMMC2
CPU2	P2-DIMMD1	P2-DIMMD2	P2-DIMME1	P2-DIMME2	P2-DIMMF1	P2-DIMMF2

Processor and Memory Module Population for Optimal Performance	
Number of CPUs+DIMMs	**CPU and Memory Population Configuration Table (For memory to work properly, please follow the instructions below.)**
1 CPU & 2 DIMMs	CPU1 P1-DIMMA1/P1-DIMMB1
1 CPU & 4 DIMMs	CPU1 P1-DIMMA1/P1-DIMMB1, P1-DIMMA2/P1-DIMMB2
1 CPU & 6 DIMMs	CPU1 P1-DIMMA1/P1-DIMMB1, P1-DIMMA2/P1-DIMMB2, P1-DIMMC1/P1-DIMMC2
2 CPUs & 4 DIMMs	CPU1 + CPU2 P1-DIMMA1/P1-DIMMB1, P2-DIMMD1/P2-DIMME1
2 CPUs & 6 DIMMs	CPU1 + CPU2 P1-DIMMA1/P1-DIMMB1/P1-DIMMC1, P2-DIMMD1/P2-DIMME1/ P2-DIMMF1
2 CPUs & 8 DIMMs	CPU1 + CPU2 P1-DIMMA1/P1-DIMMB1/P1-DIMMC1/P1-DIMMA2, P2-DIMMD1/P2-DIMME1/ P2-DIMMF1/P2-DIMMD2
2 CPUs & 10 DIMMs	CPU1 + CPU2 P1-DIMMA1/P1-DIMMB1/P1-DIMMC1/P1-DIMMA2/P1-DIMMB2, P2-DIMMD1/P2-DIMME1/P2-DIMMF1/P2-DIMMD2/P2-DIMME2
2 CPUs & 12 DIMMs	CPU1 + CPU2 P1-DIMMA1/P1-DIMMB1/P1-DIMMC1/P1-DIMMA2/P1-DIMMB2/P1-DIMMC2, P2-DIMMD1/P2-DIMME1/P2-DIMMF1/P2-DIMMD2/P2-DIMME2/P2-DIMMF2

Populating UDIMM (ECC/Non-ECC) Memory Modules

Intel E5-2400 Series Processor UDIMM Memory Support							
Ranks Per DIMM & Data Width	**Memory Capacity Per DIMM (See the Note below)**			**Speed (MT/s) and Voltage Validated by Slot per Channel (SPC) and DIMM Per Channel (DPC)**			
				2 Slots Per Channel			
				1DPC		**2DPC**	
				1.35V	**1.5V**	**1.35V**	**1.5V**
SRx8 Non-ECC	1GB	2GB	4GB	NA	1066,1333	NA	1066
DRx8 Non-ECC	2GB	4GB	8GB	NA	1066,1333	NA	1066
SRx16 Non-ECC	512MB	1GB	2GB	NA	1066,1333	NA	1066
SRx8 ECC	1GB	2GB	4GB	1066, 1333	1066,1333	1066	1066
DRx8 ECC	2GB	4GB	8GB	1066, 1333	1066,1333	1066	1066
Note: For detailed information on memory support and updates, please refer to the SMC Recommended. Memory List posted on our website at http://www.supermicro.com/support/resources/mem.cfm.							

Populating RDIMM (ECC) Memory Modules

Intel E5-2400 Series Processor RDIMM Memory Support							
Ranks Per DIMM & Data Width	**Memory Capacity Per DIMM (See the Note Below)**			**Speed (MT/s) and Voltage Validated by Slot per Channel (SPC) and DIMM Per Channel (DPC)**			
				2 Slots Per Channel			
				1DPC		**2DPC**	
				1.35V	**1.5V**	**1.35V**	**1.5V**
SRx8	1GB	2GB	4GB	1066, 1333	1066, 1333, 1600	1066, 1333	1066, 1333, 1600
DRx8	2GB	4GB	8GB	1066, 1333	1066, 1333, 1600	1066, 1333	1066, 1333, 1600
SRx4	2GB	4GB	8GB	1066, 1333	1066, 1333, 1600	1066, 1333	1066, 1333, 1600
DRx4	4GB	8GB	16GB	1066, 1333	1066, 1333, 1600	1066, 1333	1066, 1333, 1600
QRx4	8GB	16GB	32GB	800	1066	800	800
QRx8	4GB	8GB	16GB	800	1066	800	800
Note: For detailed information on memory support and updates, please refer to the SMC Recommended Memory List posted on our website at http://www.supermicro.com/support/resources/mem.cfm.							

Populating LRDIMM (ECC) Memory Modules

Intel E5-2400 Series Processor LRDIMM Memory Support						
Ranks Per DIMM & Data Width (See the Note Below)	**Memory Capacity Per DIMM**		**Speed (MT/s) and Voltage Validated by Slot per Channel (SPC) and DIMM Per Channel (DPC)**			
			1 Slot Per Channel		**2 Slots Per Channel**	
			1DPC		**1DPC and 2DPC**	
			1.35V	**1.5V**	**1.35V**	**1.5V**
QRx4 (DDP)	16GB	32GB	1066, 1333	1066, 1333	1066	1066, 1333
QRx8 (P)	8GB	16GB	1066, 1333	1066, 1333	1066	1066, 1333
Note: For detailed information on memory support and updates, please refer to the SMC Recommended Memory List posted on our website at http://www.supermicro.com/support/resources/mem.cfm.						

Other Important Notes and Restrictions

- For the memory modules to work properly, please install DIMM modules of the same type, same speed and same operating frequency on the serverboard. Mixing of RDIMMs, UDIMMs or LRDIMMs is not allowed. Do not install both ECC and Non-ECC memory modules on the same serverboard.

- Using DDR3 DIMMs with different operating frequencies is not allowed. All channels in a system will run at the lowest common frequency.

5-6 Adding PCI Expansion Cards

PCI Expansion Slots

One riser card is used to support PCI expansion cards included with the system. The RSC-R1UU-E8E16 riser card plugs into the UIO slot on the serverboard to support one full-height, full-length PCI-Express x8 and one full-height, half-length PCI-Express x8 expansion card.

Installing a PCI Add-on Card

1. Release the locking tab that corresponds to the slot you wish to populate.

2. Insert the expansion card into the riser card, pushing down with your thumbs evenly on both sides of the card.

5-7 Serverboard Details

Figure 5-5. SUPER X9DBU-iF Layout

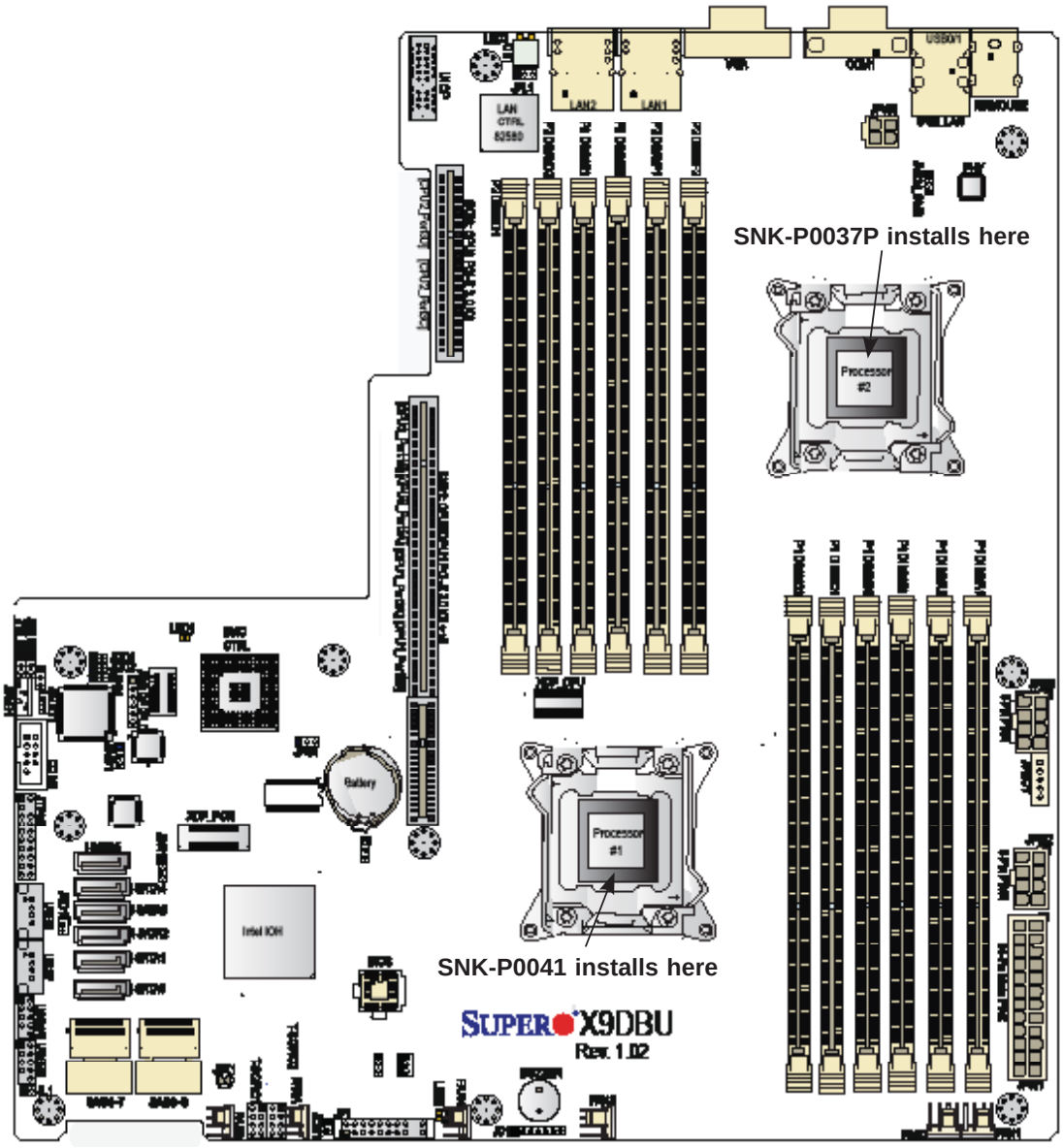

Notes:

Jumpers not indicated are for test purposes only.

"▪" indicates the location of "Pin 1".

SAS components are not included on the X9DBU-iF.

X9DBU-iF Quick Reference

LED	Description	State/Status
LED1	BMC Heatbeat	Blinking Green: BMC Normal
LED2	Standby Pwr LED	Solid Green: SB Power On
LED3	UID LED	Solid Blue (Windows), Blinking (Linux): Unit Identified

Jumper	Description	Default Setting
JBT1	Clear CMOS	See Section 5-9
JI^{2}C1/JI^{2}C2	SMB to PCI-E Slots	Open (Normal)
JPB1	BMC Enable/Disable	Pins 1-2 (Enabled)
JPG1	VGA Enable/Disable	Pins 1-2 (Enabled)
JPL1	LAN1/LAN2 Enable/Disable	Pins 1-2 (Enabled)
JVRM_JI^{2}C1/JI^{2}C2	I^{2}C Bus to CPU1/2 VRMs	Pins 1-2 (Enabled)
JWD1	Watch Dog	Pins 1-2 (Reset)

Connector	Description
COM1/COM2	Backplane COM Port1/Front Accessible COM2 Header
FAN1~4, FANA/B	CPU/System Fan Headers
IPMB1	4-pin External BMC I^{2}C Header (for IPMI Card)
I-SATA 0~5	SATA Ports 0~5 (0/1: SATA 3.0 Ports, 2-5: SATA 2.0 Ports)
JD1	Power LED/Speaker (PWR LED Pins 1~3, Speaker: Pins 4~7)
JF1	Front Panel Control Header
JL1	Chassis Intrusion
JOH1	Overheat/Fan Fail LED
JPI^{2}C1	Power Supply SMBbus I^{2}C Header
JPW1	ATX 24-Pin Power Connector
JPW2~JPW3	12V 8-Pin Power Connectors
JPW4	4-Pin Power Connector
JSTBY1	Standby Header
JTAG of CPLD	JTAG of CPLD (Complex Programming Logical Device)
JTPM1	TPM (Trusted Platform Module)/Port 80
JSD1	SATA DOM (Device On Module) Power Connector
LAN1/2	G-bit Ethernet Ports 1/2
(IPMI) LAN	Dedicated IPMI LAN
T-SGPIO 1/2	Serial link General Purpose I/O Connections 1/2
UIOP	SMC-Proprietary Universal I/O Slot
USB 0/1	Back Panel USB 0/1 Ports
USB 2/3, 4/5	Front Panel Accessible USB 2/3, 4/5 Headers
USB 6, USB7	Front Panel Type A USB 6 Port
UID Switch	UID (Unit Identifier) Switch
VGA1	Backpanel VGA Port 1/Front Panel VGA Port2

5-8 Connector Definitions

Power Connectors

A 24-pin main power supply connector(JPW1), two 8-pin CPU power connectors (JPW2/JPW3) and a 4-pin auxiliary power connector are located on the serverboard. These power connectors meet the SSI EPS 12V specification. These power connectors must all be connected to your power supply. See the tables on the right for pin definitions.

ATX Power 24-pin Connector Pin Definitions

Pin#	Definition	Pin #	Definition
13	+3.3V	1	+3.3V
14	-12V	2	+3.3V
15	COM	3	COM
16	PS_ON	4	+5V
17	COM	5	COM
18	COM	6	+5V
19	COM	7	COM
20	Res (NC)	8	PWR_OK
21	+5V	9	5VSB
22	+5V	10	+12V
23	+5V	11	+12V
24	COM	12	+3.3V

Processor Power Connectors

JPW2 and JPW3 must also be connected to the power supply to provide power for the processor(s). See the table on the right for pin definitions.

12V 8-pin PWR Connector Pin Definitions

Pins	Definition
1 through 4	Ground
5 through 8	+12V

(Required)

NMI Button

The non-maskable interrupt button header is located on pins 19 and 20 of JF1. Refer to the table on the right for pin definitions.

NMI Button Pin Definitions (JF1)

Pin#	Definition
19	Control
20	Ground

Power LED

The Power LED connection is located on pins 15 and 16 of JF1. Refer to the table on the right for pin definitions.

Power LED Pin Definitions (JF1)

Pin#	Definition
15	Vcc
16	Control

HDD LED

The HDD (IDE Hard Disk Drive) LED connection is located on pins 13 and 14 of JF1. Attach the IDE hard drive LED cable to display disk activity. Refer to the table on the right for pin definitions.

HDD LED Pin Definitions (JF1)	
Pin#	Definition
13	Vcc
14	HD Active

NIC1 LED

The NIC1 (Network Interface Controller) LED connection is located on pins 11 and 12 of JF1. Attach the NIC1 LED cable to display network activity. Refer to the table on the right for pin definitions.

NIC1 LED Pin Definitions (JF1)	
Pin#	Definition
11	Vcc
12	Ground

NIC2 LED

The NIC2 (Network Interface Controller) LED connection is located on pins 9 and 10 of JF1. Attach the NIC2 LED cable to display network activity. Refer to the table on the right for pin definitions.

NIC2 LED Pin Definitions (JF1)	
Pin#	Definition
9	Vcc
10	Ground

Overheat (OH)/Fan Fail/PWR Fail/ UID LED

Connect an LED to pins 7 and 8 of JF1 to provide advanced warning of chassis overheating or fan failure. These pins also work with the front UID indicator, which will activate as either a solid or flashing blue LED depending on whether the LED was activated via IPMI or the UID button. Refer to the tables on the right for pin definitions and status indicators.

Universal Info. LED Pin Definitions (JF1)	
Pin#	Definition
7	Vcc
8	Control

Red LED Indications	
State	Indication
Solid	Overheat
Blinking (fast)	Fan Fail
Blinking (slow)	Power Fail

Blue LED Indications	
State	Indication
Solid	UID (via Button)
Blinking	UID (via IPMI)

Power Fail LED

The Power Fail LED connection is located on pins 5 and 6 of JF1. Refer to the table on the right for pin definitions.

Power Fail LED Pin Definitions (JF1)	
Pin#	Definition
5	Vcc
6	Ground

Reset Button

The Reset Button connection is located on pins 3 and 4 of JF1. Attach it to the hardware reset switch on the computer case. Refer to the table on the right for pin definitions.

Reset Button Pin Definitions (JF1)	
Pin#	Definition
3	Reset
4	Ground

Power Button

The Power Button connection is located on pins 1 and 2 of JF1. Momentarily contacting both pins will power on/off the system. This button can also be configured to function as a suspend button (see the Power Button Mode setting in BIOS). To turn off the power when set to suspend mode, depress the button for at least 4 seconds. Refer to the table on the right for pin definitions.

Power Button Pin Definitions (JF1)	
Pin#	Definition
1	PW_ON
2	Ground

Universal Serial Bus (USB)

Two Universal Serial Bus ports (USB 0/1) are located on the I/O back panel. In addition, two USB headers located close to the I-SATA ports provide four front-accessible USB connections (USB 2/3, USB 4/5). Two Type A connectors (USB 6, USB 7) are also provided for front USB support (cables are not included). See the tables on the right for pin definitions.

Back Panel USB (USB 0/1) Pin Definitions	
Pin#	Definition
1	+5V
2	PO-
3	PO+
4	Ground
5	NA

FP USB (2/3, 4/5) Pin Definitions			
USB 2, 4, 6		USB 3, 5	
Pin #	Definition	Pin #	Definition
1	+5V	1	+5V
2	PO-	2	PO-
3	PO+	3	PO+
4	Ground	4	Ground
5	NC	5	Key

(NC= No connection)

Serial Ports

The COM1 serial port is located on the IO backplane. COM2 is a header on the serverboard (see serverboard layout for location). See the table on the right for pin definitions.

Serial Port Pin Definitions (COM1, COM2)

Pin #	Definition	Pin #	Definition
1	DCD	6	DSR
2	RXD	7	RTS
3	TXD	8	CTS
4	DTR	9	RI
5	Ground	10	NC

Note: Pin 10 is included on the header but not on the port. NC indicates no connection.

Fan Headers

The X9DBU-iF has six headers (Fan 1~Fan 4, Fan A and FAN B). Their speed is controlled via IPMI. See the table on the right for pin definitions.

Fan Header Pin Definitions (FAN1-8)

Pin#	Definition
1	Ground (Black)
2	+12V (Red)
3	Tachometer
4	PWM Control

Ethernet Ports

Two Gigabit Ethernet ports (LAN1/2) are located on the I/O backplane to provide Ethernet connections. In addition, an dedicated IPMI LAN port, located above the USB 0/1 ports, provides KVM support for IPMI 2.0. All these ports accept RJ45 type cables.

LAN Ports Pin Definition

Pin#	Definition		
1	P2V5SB	10	SGND
2	TD0+	11	Act LED
3	TD0-	12	P3V3SB
4	TD1+	13	Link 100 LED (Yellow, +3V3SB)
5	TD1-	14	Link 1000 LED (Yellow, +3V3SB)
6	TD2+	15	Ground
7	TD2-	16	Ground
8	TD3+	17	Ground
9	TD3-	18	Ground

(NC: No Connection)

Chassis Intrusion

A Chassis Intrusion header is located at JL1. Attach the appropriate cable to inform you of a chassis intrusion.

Chassis Intrusion Pin Definitions (JL1)

Pin#	Definition
1	Intrusion Input
2	Ground

Power LED/Speaker

On the JD1 header, pins 1-3 are for a power LED and pins 4-7 are for an external speaker. See the table on the right for speaker pin definitions.

Note: The speaker connector pins are for use with an external speaker. If you wish to use the onboard speaker, you should close pins 6-7 with a jumper.

PWR LED Connector Pin Definitions	
Pin Setting	Definition
Pin 1	Anode (+)
Pin2	Cathode (-)
Pin3	NA

Speaker Connector Pin Settings	
Pin Setting	Definition
Pins 4-7	External Speaker
Pins 6-7	Internal Speaker

Overheat/Fan Fail LED

Connect an LED to the JOH1 header to provide warning of a chassis overheating condition. When solid this LED indicates an overheat condition and when blinking indicates a fan failure. See the table on the right for pin definitions.

Overheat/Fan Fail LED Pin Definitions	
Pin#	Definition
1	+5V
2	OH Active

SGPIO

The two headers labeled T-SGPIO-1 and T-SGPIO-2 are for SGPIO (Serial General Purpose Input/Output). SGPIO supports serial link interfaces for the onboard SATA ports. Connect the appropriate cables from the backplane to the SGPIO1 and SGPIO2 headers to utilize SATA management functions on your system.

SGPIO Headers Pin Definitions			
Pin#	Definition	Pin #	Definition
1	NC	2	NC
3	Ground	4	Data
5	Load	6	Ground
7	NC	8	NC

Note: NC indicates no connection.

IPMB

A System Management Bus header for IPMI 2.0 is located at JIPMB. Connect the appropriate cable here to use the IPMB I^2C connection on your system.

IPMB Header Pin Definitions	
Pin#	Definition
1	Data
2	Ground
3	Clock
4	No Connection

Power SMB (I^2C) Connector

The Power System Management Bus (I^2C) header (JPI^{2}C) is used to monitor the power supply, fan and system temperatures. See the table on the right for pin definitions.

PWR SMB Pin Definitions	
Pin#	Definition
1	Clock
2	Data
3	PWR Fail
4	Ground
5	+3.3V

Buzzer

The buzzer, located at SP1, can be used to provide audible indications for various beep codes. See the table on the right for pin definitions. Refer to the layout below for the locations of the Internal Buzzer (SP1).

Internal Buzzer Pin Definitions		
Pin#		Definitions
Pin 1	Pos. (+)	Beep In
Pin 2	Neg. (-)	Alarm Speaker

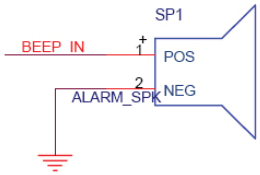

Unit Identifier Switch/LEDs

The UID switch is located next to the GLAN 2 port on the backplane. The rear UID LED (LED3) is located next to the UID switch. The Front Panel UID LED connection is on pins 7/8 of JF1. Connect a cable to pin 8 on JF1 for Front Panel UID LED indication. When you press the UID switch, both the rear and font UID LEDs will be turned on. Press the UID switch again to turn off both LEDs. These UID indicators provide easy identification of a system unit that may be in need of service.

Note: UID can also be triggered via IPMI on the serverboard. For more information on IPMI, please refer to the IPMI User's Guide posted on our Website.

UID Switch	
Pin#	Definition
1	Ground
2	Ground
3	Button In
4	Ground

UID LED (LE2) Status		
Color/State	OS	Status
Blue: On	Windows OS	Unit Identified
Blue: Blinking	Linux OS	Unit Identified

Standby Power

The Standby Power header is located at JSTBY1 on the serverboard. See the table on the right for pin definitions. (You must also have a cable to use this feature.)

Standby Power Pin Definitions	
Pin#	Definition
1	+5V Standby
2	Ground
3	Wake-up

DOM Power Connector

A power connector for SATA DOM (Disk On Module) devices is located at JSD1. Connect an appropriate cable here to provide power support for your DOM devices.

DOM PWR Pin Definitions	
Pin#	Definition
1	+5V
2	Ground
3	Ground

TPM Header/Port 80

A Trusted Platform Module/Port 80 header is located at JTPM1 to provide TPM support and Port 80 connection. Use this header to enhance system performance and data security. See the table on the right for pin definitions.

TPM/Port 80 Header Pin Definitions			
Pin #	Definition	Pin #	Definition
1	LCLK	2	GND
3	LFRAME#	4	<(KEY)>
5	LRESET#	6	+5V (X)
7	LAD 3	8	LAD 2
9	+3.3V	10	LAD1
11	LAD0	12	GND
13	SMB_CLK4	14	SMB_DAT4
15	+3V_DUAL	16	SERIRQ
17	GND	18	CLKRUN# (X)
19	LPCPD#	20	LDRQ# (X)

5-9 Jumper Settings

Explanation of Jumpers

To modify the operation of the serverboard, jumpers can be used to choose between optional settings. Jumpers create shorts between two pins to change the function of the connector. Pin 1 is identified with a square solder pad on the printed circuit board. See the diagram at right for an example of jumping pins 1 and 2. Refer to the serverboard layout page for jumper locations.

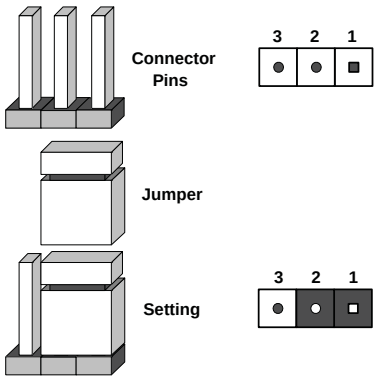

Note: On two-pin jumpers, "Closed" means the jumper is on and "Open" means the jumper is off the pins.

CMOS Clear

JBT1 is used to clear CMOS and will also clear any passwords. Instead of pins, this jumper consists of contact pads to prevent accidentally clearing the contents of CMOS.

To clear CMOS

1. First power down the system and unplug the power cord(s).
2. With the power disconnected, short the CMOS pads with a metal object such as a small screwdriver.
3. Remove the screwdriver (or shorting device).
4. Reconnect the power cord(s) and power on the system.

Note: *Do not use the PW_ON connector to clear CMOS.*

VGA Enable/Disable

JPG1 allows you to enable or disable the VGA port. The default position is on pins 1 and 2 to enable VGA. See the table on the right for jumper settings.

VGA Enable/Disable Jumper Settings (JPG1)

Jumper Setting	Definition
Pins 1-2	Enabled
Pins 2-3	Disabled

LAN Enable/Disable

Change the setting of jumper JPL1 to enable or disable the onboard Ethernet (RJ45) ports LAN1 and LAN2. See the table on the right for jumper settings. The default setting is enabled.

LAN Enable/Disable Jumper Settings (JPL1)	
Jumper Setting	Definition
Pins 1-2	Enabled
Pins 2-3	Disabled

Watch Dog Enable/Disable

JWD1 controls the Watch Dog function. Watch Dog is a system monitor that can reboot the system when a software application “hangs”. Pins 1-2 will cause WD to reset the system if an application hangs. Pins 2-3 will generate a non-maskable interrupt signal for the application that has hung. See the table on the right for jumper settings. Watch Dog must also be enabled in BIOS.

Note: When enabled, the user needs to write their own application software to disable the Watch Dog Timer.

Watch Dog Jumper Settings (JWD1)	
Jumper Setting	Definition
Pins 1-2	Reset
Pins 2-3	NMI
Open	Disabled

SMB to PCI Express Slots

Jumpers JI^{2}C1 and JI^{2}C2 allow you to connect the System Management Bus (I^{2}C) to the PCI Express slots. The default setting is Open to disable the connection. See the table on the right for jumper settings.

SMB to PCI-Exp Jumper Settings	
Jumper Setting	Definition
Closed	Enabled
Open	Disabled

BMC Enable

Jumper JPB1 allows you to enable the embedded the Nuvoton WPCM450R BMC (Baseboard Management) controller to provide IPMI 2.0/KVM support on the serverboard. See the table on the right for jumper settings.

BMC Enable Jumper Settings	
Jumper Setting	Definition
Pins 1-2	BMC Enable
Pins 2-3	Normal (Default)

I2C Bus to CPU1/CPU2 VRMs

Use Jumpers JVRM_JI^{2}C1/JI^{2}C2 to connect the System Management Buses (I^{2}C) to CPU1/CPU2 VRMs. The default setting is on pins 1-2 to Enable the connection. See the table on the right for jumper settings.

I^{2}C to VRMs Jumper Settings	
Jumper Setting	Definition
Pins 1-2	Enabled (Default)
Pins 2-3	Disabled

5-10 Onboard Indicators

LAN1/LAN2 LEDs

The Ethernet ports (located beside the VGA port) have two LEDs. On each Gigabit LAN port, one LED indicates activity when blinking while the other LED may be green, amber or off to indicate the speed of the connection. See the table on the right for the functions associated with the connection speed LED.

LAN LED Connection Speed Indicator	
LED Color	Definition
Off	No connection or 10 Mb/s
Green	100 Mb/s
Amber	1 Gb/s

Dedicated IPMI LAN LEDs

In addition to LAN1 and LAN2, the X9DBU-iF has a dedicated IPMI LAN port located on the IO backpanel. The amber LED indicates activity, while the Link LED may be green, amber or off to indicate the speed of the connection. See the tables at right for more information.

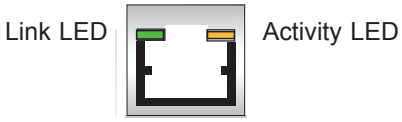

IPMI LAN Activity LED Indicator		
Color	Status	Definition
Amber	Flashing	Active

IPMI LAN Indicator LED Settings	
LED Color	Definition
Off	No Connection or 10 Mb/s
Green	100 Mb/s
Amber	1 Gb/s

LED2

An Onboard Power LED is located at LED2 on the serverboard. When this LED is on, the system is on. Be sure to turn off the system and unplug the power cord before removing or installing components. See the tables at right for more information.

Onboard PWR LED Indicator	
LED Color	Definition
Off	System Off/Power cable not connected
Green	System On
Green: Flashing Quickly	ACPI S1 State
Green: Flashing Slowly	ACPI S3 State

Rear UID LED

LED3 is the rear UID LED, located on the rear of the serverboard. This LED is used in conjunction with the rear UID switch to provide easy identification of a system that might be in need of service.

UID LED Status		
Color/State	OS	Status
Blue: On	Windows OS	Unit Identified
Blue: Blinking	Linux OS	Unit Identified

BMC Heartbeat LED

A BMC Heartbeat LED is designated LED1. When LED1 is blinking, BMC is functioning normally. See the table at right for more information.

BMC Heartbeat LED Status	
Color/State	Definition
Green: Blinking	BMC: Normal

5-11 SATA Port Connections

SATA Ports

See the table on the right for pin definitions for the onboard SATA ports.

SATA Port Pin Definitions (I-SATA0 ~ I-SATA5)	
Pin #	Definition
1	Ground
2	TXP
3	TXN
4	Ground
5	RXN
6	RXP
7	Ground

5-12 Installing Software

After the hardware has been installed, you should first install the operating system and then the drivers. The necessary drivers are all included on the Supermicro CDs that came packaged with your system.

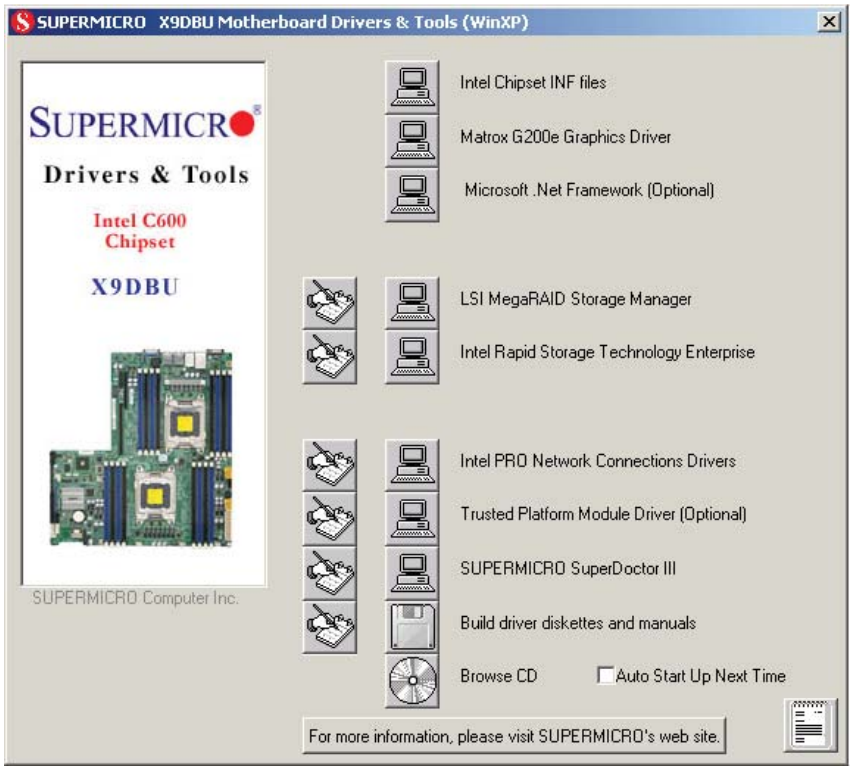

Driver/Tool Installation Display Screen

Note: Click the icons showing a hand writing on paper to view the readme files for each item. Click the computer icons to the right of these items to install each item (from top to the bottom) one at a time. **After installing each item, you must re-boot the system before moving on to the next item on the list.** The bottom icon with a CD on it allows you to view the entire contents of the CD.

Supero Doctor III

The Supero Doctor III program is a Web based management tool that supports remote management capability. It includes Remote and Local Management tools. The local management is called SD III Client. The Supero Doctor III program included on the CDROM that came with your system allows you to monitor the environment and operations of your system. Supero Doctor III displays crucial system information such as CPU temperature, system voltages and fan status. See the Figure below for a display of the Supero Doctor III interface.

Note: The default User Name and Password for SuperDoctor III is ADMIN / ADMIN.

Note: When SuperDoctor III is first installed, it adopts the temperature threshold settings that have been set in BIOS. Any subsequent changes to these thresholds must be made within Super Doctor, as the Super Doctor settings override the BIOS settings. To set the BIOS temperature threshold settings again, you would first need to uninstall SuperDoctor III.

Supero Doctor III Interface Display Screen (Health Information)

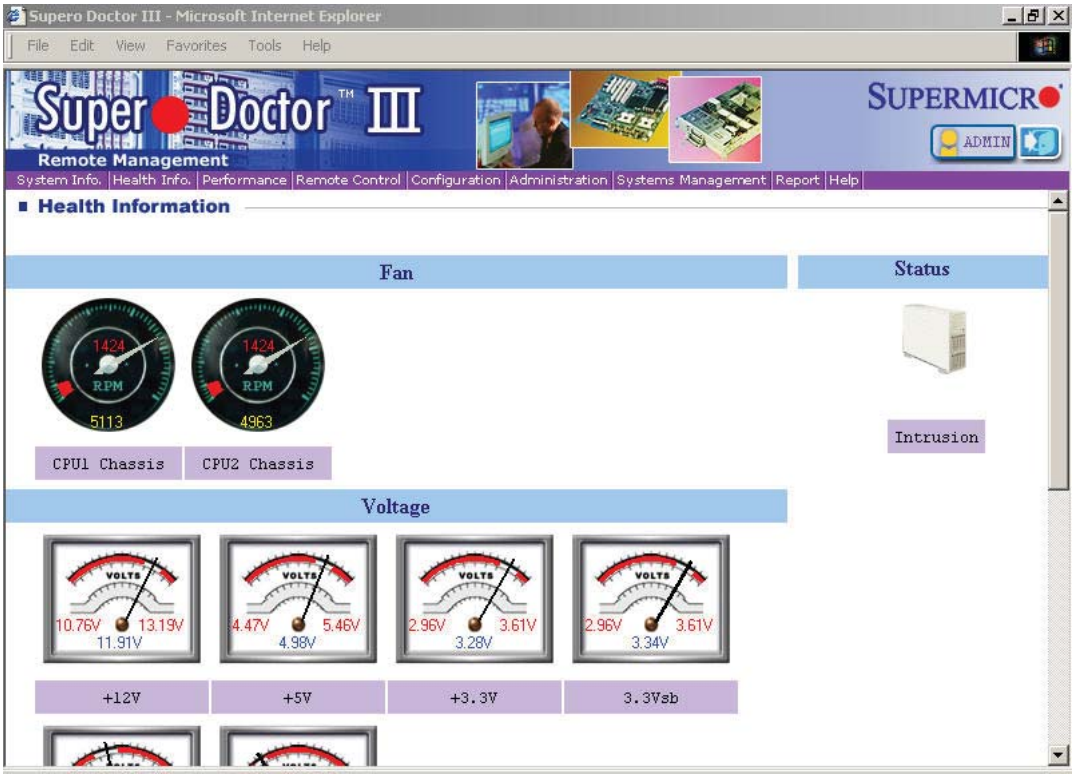

Supero Doctor III Interface Display Screen (Remote Control)

Note: SD III Software Revision 1.0 can be downloaded from our Web Site at: ftp://ftp.supermicro.com/utility/Supero_Doctor_III/. You can also download SDIII User's Guide at: http://www.supermicro.com/PRODUCT/Manuals/SDIII/UserGuide.pdf. For Linux, we will still recommend Supero Doctor II.

Chapter 6

Advanced Chassis Setup

This chapter covers the steps required to install components and perform maintenance on the SC813T-600UB chassis. For component installation, follow the steps in the order given to eliminate the most common problems encountered. If some steps are unnecessary, skip ahead to the next step.

The only tool you will need to install components and perform maintenance is a Philips screwdriver.

6-1 Static-Sensitive Devices

Electricstatic discharge (ESD) can damage electronic components. To prevent damage to any printed circuit boards (PCBs), it is important to handle them very carefully. The following measures are generally sufficient to protect your equipment from ESD damage.

Precautions

- Use a grounded wrist strap designed to prevent static discharge.
- Touch a grounded metal object before removing any board from its antistatic bag.
- Handle a board by its edges only; do not touch its components, peripheral chips, memory modules or gold contacts.
- When handling chips or modules, avoid touching their pins.
- Put the serverboard, add-on cards and peripherals back into their antistatic bags when not in use.
- For grounding purposes, make sure your computer chassis provides excellent conductivity between the power supply, the case, the mounting fasteners and the serverboard.

Figure 6-1. Chassis: Front and Rear Views

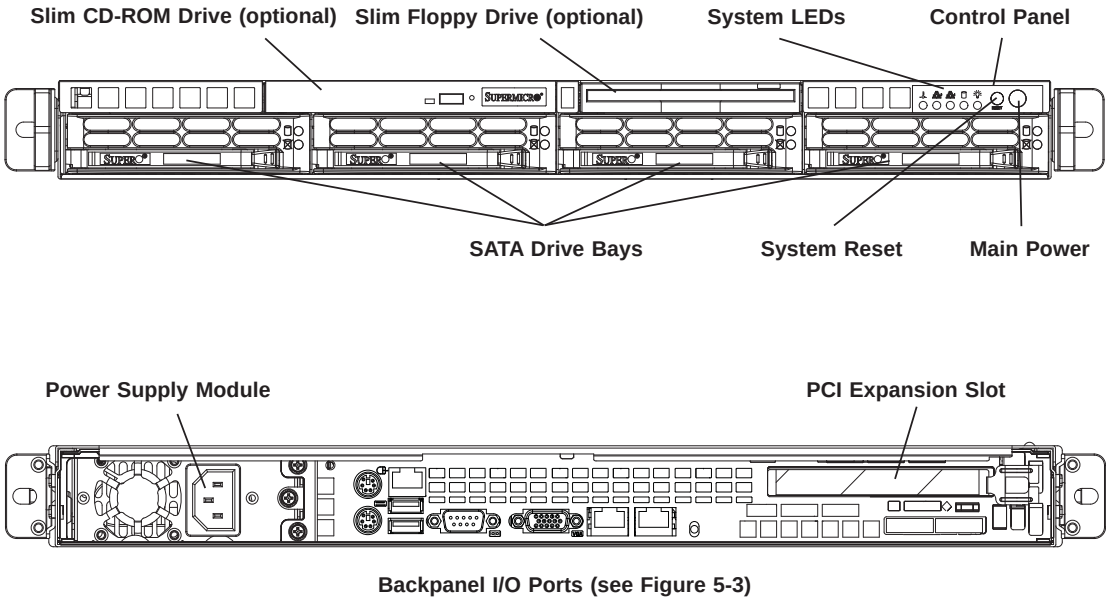

6-2 Control Panel

The control panel (located on the front of the chassis) must be connected to the JF1 connector on the serverboard to provide you with system status indications. These wires have been bundled together as a ribbon cable to simplify the connection. Connect the cable from JF1 on the serverboard to the appropriate header on the Control Panel PCB (printed circuit board). Make sure the red wire plugs into pin 1 on both connectors. Pull all excess cabling out of the airflow path.

The control panel LEDs inform you of system status. See "Chapter 3: System Interface" for details on the LEDs and the control panel buttons. Details on JF1 can be found in "Chapter 5: Advanced Serverboard Setup."

6-3 System Fans

Two 10-cm blower fans provide all the cooling needed for the SuperServer 6017B-NTF. It is very important that the chassis top cover is properly installed and making a good seal in order for the cooling air to circulate properly through the chassis and cool the components. See Figure 6-2.

System Fan Failure

Fan speed is controlled by system temperature via a BIOS setting. If a fan fails, the remaining fan will ramp up to full speed and the overheat/fan fail LED on the control panel will turn on. Replace any failed fan at your earliest convenience with the same type and model (the system can continue to run with a failed fan).

Accessing the Inside of the System

Remove the top chassis cover while the system is still running to determine which of the two fans has failed:

1. Grasp the two handles on either side and pull the unit straight out until it locks (you will hear a "click").

2. Depress the two buttons on the top of the chassis to release the top cover. Push the cover away from you until it stops.

3. Lift the top cover from the chassis to gain full access to the inside of the server. See Figure 6-2.

4. Power down the system before replacing a fan. Removing the power cord from the power supply is also recommended as a safety precaution.

Replacing System Cooling Fans

1. Detach the fan wires from the serverboard then lift the failed blower fan off its mounting posts and completely free from the serverboard. See Figure 6-3.

2. Replace the failed fan with an identical 10-cm fan (available from Supermicro). Install the new fan in its proper place in the chassis by positioning it on the two mounting posts.

3. Attach the fan wires to the same chassis fan header you removed them from.

4. Power up the system and check that the fan is working properly and that the LED on the control panel has turned off. Finish by replacing the chassis cover.

Figure 6-2. Accessing the Inside of the System

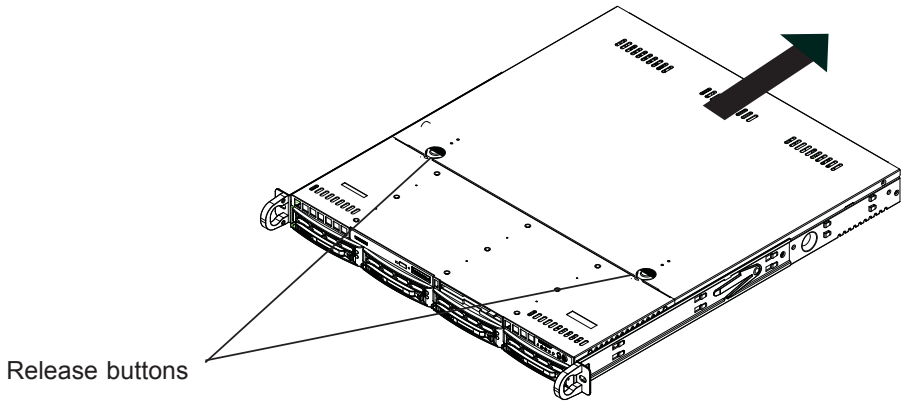

Figure 6-3. Removing System Cooling Fans

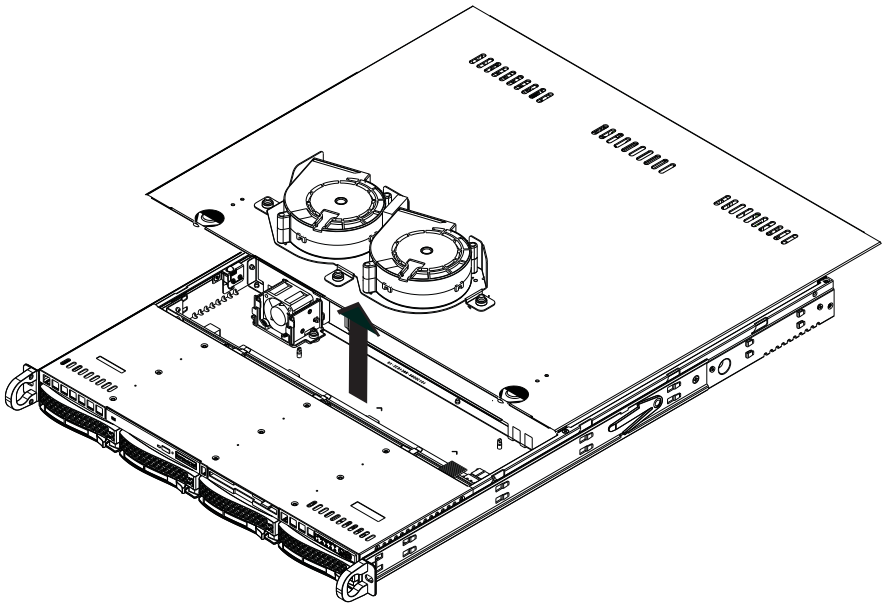

6-4 Drive Bay Installation/Removal

Removing the Front Bezel

If your system has the optional front bezel attached to the chassis, you must first remove it to gain access to the drive bays.

1. First unlock the front of the chassis then press the release knob (see Figure 6-4).

2. Carefully remove the bezel with both hands. A filter located within the bezel can be removed for replacement/cleaning. It is recommended that you keep a maintenance log of filter cleaning/replacement, since its condition will affect the airflow throughout the whole system.

Figure 6-4. Removing the Front Bezel

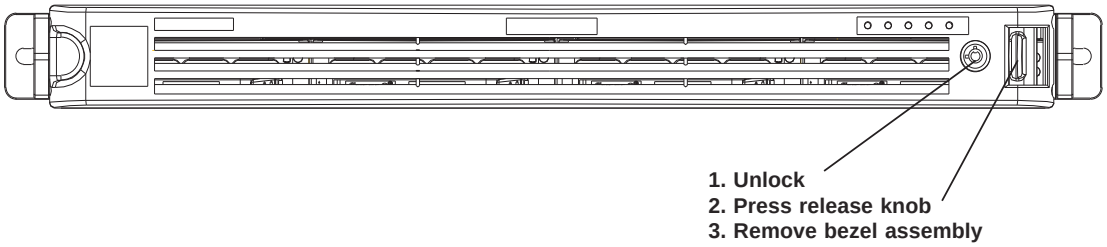

Accessing the Drive Bays

Serial ATA Drives: Because of their hotswap capability, you do not need to access the inside of the chassis or power down the system to install or replace Serial ATA drives. Proceed to the next step for instructions.

CD-ROM/Floppy Disk Drives: For installing/removing a CD-ROM or floppy disk drive, you will need to gain access to the inside of the 6017B-NTF by removing the top cover of the chassis. Proceed to the "CD-ROM and Floppy Drive Installation" section later in this chapter for instructions.

Note: Only a "slim" CD-ROM drive will fit into the 6017B-NTF.

SATA Drive Installation

The SATA drives are mounted in drive carriers to simplify their installation and removal from the chassis. These carriers also help promote proper airflow for the Serial ATA drive bays. For this reason, even empty carriers without drives installed must remain in the chassis.

1. To remove a carrier, push the release button located beside the drive LEDs. Swing the colored handle fully out and use it to pull the unit straight out (see Figure 6-5)

2. Install a drive into the carrier with the printed circuit board side facing down so that the mounting holes align with those in the carrier.

3. Secure the drive to the carrier with four screws, as shown in Figure 6-6.

Figure 6-5. Removing a SATA Drive from the Server

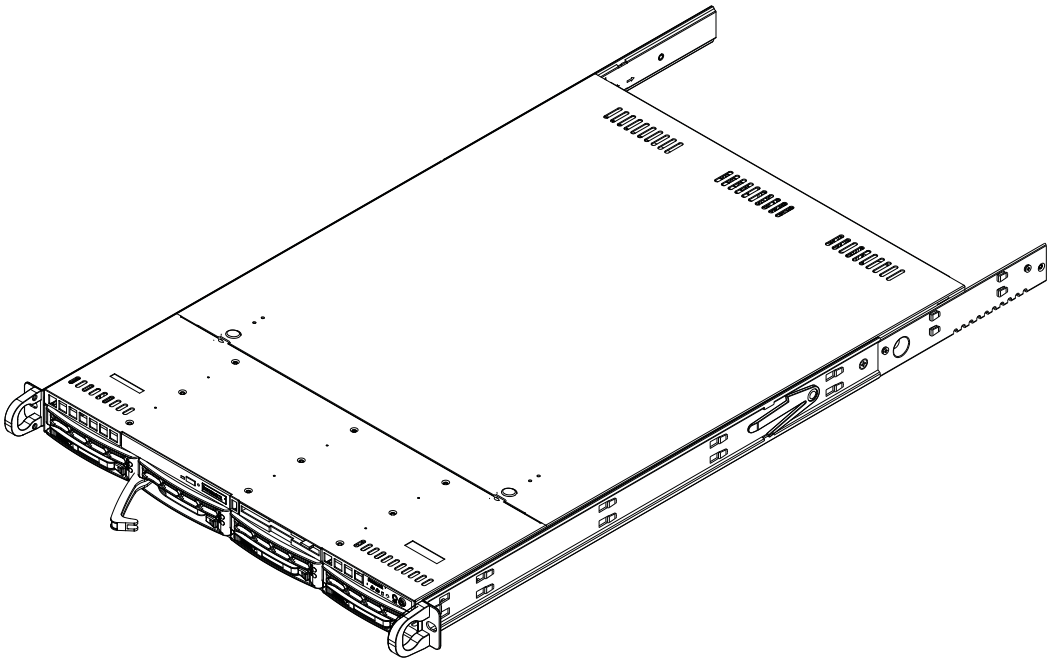

Use caution when working around the SATA backplane. Do not touch the backplane with any metal objects and make sure no ribbon cables touch the backplane. Also, regardless of how many drives are installed, all four drive carriers must remain in the chassis to maintain proper airflow.

Enterprise level hard disk drives are recommended for use in Supermicro chassis and servers. For information on recommended HDDs, visit the Supermicro Web site at http://www.supermicro.com/products/nfo/files/storage/SAS-1-CompList-110909.pdf

Figure 6-6. Mounting a SATA Drive in a Carrier

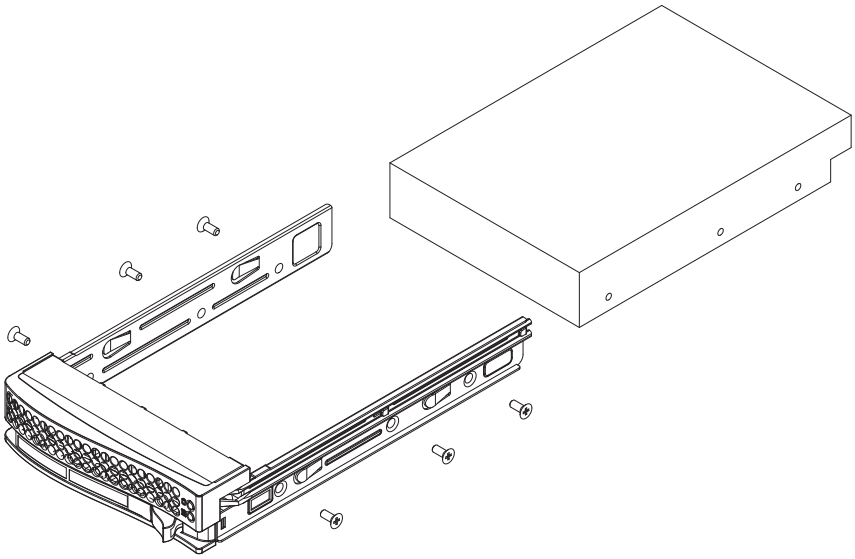

SATA Power Cables

Serial ATA power cables should be routed so that they do not block the airflow through the chassis. See the serverboard layout diagram for the location of the cable connections.

SATA Backplane

The SATA drives plug into a backplane that provides power, drive ID and bus termination. A RAID controller can be used with the backplane to provide data security. The operating system you use must have RAID support to enable the hot-swap capability of the SATA drives. The backplane is already preconfigured, so there are no jumpers or switches present on it.

CD-ROM and Floppy Drive Installation

The top cover of the chassis must be opened to gain full access to the CD-ROM and floppy drive bays. The 6017B-NTF accomodates only slim CD-ROM drives. Side mounting brackets are needed to mount a slim CD-ROM drive in the 6017B-NTF server.

You must power down the system before installing or removing a floppy or CD-ROM drive.

1. With the chassis cover removed, unplug the power and data cables from the drive you want to remove.

2. Locate the locking tab at the rear of the drive. It will be on the left side of the drive when viewed from the front of the chassis.

3. Pull the tab away from the drive and push the drive unit out the front of the chassis.

4. Add a new drive by following this procedure in reverse order. You may hear a faint *click* of the locking tab when the drive is fully inserted.

5. Remember to reconnect the data and power cables to the drive before replacing the chassis cover and restoring power to the system.

Please be aware of the following:

- The floppy disk drive cable has seven twisted wires.

- A color mark on a cable typically designates the location of pin 1.

- A single floppy disk drive ribbon cable has 34 wires and two connectors to provide for two floppy disk drives. The connector with twisted wires always connects to drive A, and the connector that does not have twisted wires always connects to drive B.

6-5 Power Supply

The SuperServer 6017B-NTF has a single 600 watt power supply, which is auto-switching capable. This enables it to automatically sense and operate at a 100v to 240v input voltage.

Power Supply Failure

If the power supply unit fails, the system will shut down and you will need to replace the unit. Replacement units can be ordered directly from Supermicro. As there is only one power supply unit in the 6017B-NTF, power must be completely removed from the server before removing and replacing the power supply unit for whatever reason.

Removing/Replacing the Power Supply

1. First turn the power switch on the control panel off, then unplug the power cord from the system.

2. Remove the chassis cover as described in Section 6-3.

3. After making a note of all wiring from the power supply to the motherboard, disconnect them.

4. To remove the failed power supply, remove the two screws from the bottom of the chassis that secure the power supply to the chassis.

5. Pull the power supply out of the chassis (see Figure 6-7).

Installing a New Power Supply

Replace the failed power supply with the exact same model (available from Supermicro).

1. Carefully insert the new unit into the chassis.

2. Secure it through the bottom of the chassis with the two screws you removed previously.

3. Reconnect the power cords that you disconnected when removing the power supply.

4. Replace the top cover of the chassis.

5. Finish by depressing the power button on the chassis front control panel.

Figure 6-7. Removing/Replacing the Power Supply

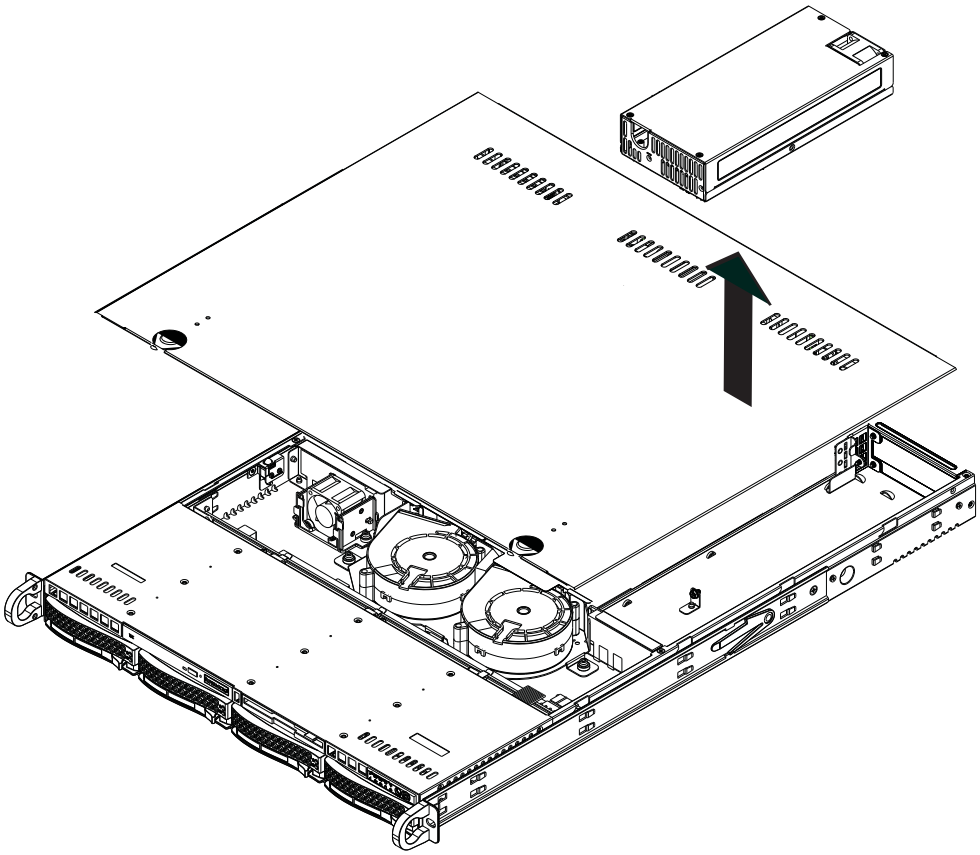

Note: power supply shown may be different than the model included in the 6017B-NTF.

Chapter 7

BIOS

7-1 Introduction

This chapter describes the AMI BIOS Setup utility for the X9DBU-3F/X9DBU-iF. It also provides the instructions on how to navigate the AMI BIOS Setup utility screens. The AMI ROM BIOS is stored in a Flash EEPROM and can be easily updated.

Starting BIOS Setup Utility

To enter the AMI BIOS Setup utility screens, press the <Del> key while the system is booting up.

Note: In most cases, the <Del> key is used to invoke the AMI BIOS setup screen. There are a few cases when other keys are used, such as <F3>, <F4>, etc.

Each main BIOS menu option is described in this manual. The Main BIOS setup menu screen has two main frames. The left frame displays all the options that can be configured. Grayed-out options cannot be configured. Options in blue can be configured by the user. The right frame displays the key legend. Above the key legend is an area reserved for informational text. When an option is selected in the left frame, it is highlighted in white. Often, informational text about the option will display on the right.

Note: The AMI BIOS has default informational messages built in. The manufacturer retains the option to include, omit, or change any of these informational messages.

The AMI BIOS Setup utility uses a key-based navigation system called "hot keys." Most of the AMI BIOS setup utility "hot keys" can be used at any time during setup navigation. These keys include <F3>, <F4>, <Enter>, <ESC>, arrow keys, etc.

Note 1: In this section, options printed in **Bold** are default settings.

Note 2: <F3> is used to load optimal default settings. <F4> is used to save the settings and exit the setup utility.

How To Change the Configuration Data

The configuration data that determines the system parameters may be changed by entering the AMI BIOS Setup utility. This Setup utility can be accessed by pressing <Delete> at the appropriate time during system boot.

Note: For AMI UEFI BIOS Recovery, please refer to the UEFI BIOS Recovery User Guide posted @http://www.supermicro.com/support/manuals/.

Starting the Setup Utility

Normally, the only visible Power-On Self-Test (POST) routine is the memory test. As the memory is being tested, press the <Delete> key to enter the main menu of the AMI BIOS Setup utility. From the main menu, you can access the other setup screens. An AMI BIOS identification string is displayed at the left bottom corner of the screen below the copyright message.

Warning! Do not upgrade the BIOS unless your system has a BIOS-related issue. Flashing the wrong BIOS can cause irreparable damage to the system. In no event shall the manufacturer be liable for direct, indirect, special, incidental, or consequential damage arising from a BIOS update. If you have to update the BIOS, do not shut down or reset the system while the BIOS is being updated to avoid possible boot failure.

7-2 Main Setup

When you first enter the AMI BIOS Setup utility, you will enter the Main setup screen. You can always return to the Main setup screen by selecting the Main tab on the top of the screen. The Main BIOS Setup screen is shown below.

The AMI BIOS main menu displays the following information:

System Date

This item displays the system date in Day MM/DD/YY format (e.g. Wed 10/12/2012).

System Time

This item displays the system time in HH:MM:SS format (e.g. 15:32:52).

Supermicro X9DBU

Version

This item displays the SMC version of the BIOS ROM used in this system.

Build Date

This item displays the date that the BIOS ROM was built.

Memory Information

Total Memory

This displays the amount of memory that is available in the system.

7-3 Advanced Setup Configurations

Use the arrow keys to select Advanced Setup and press <Enter> to access the following submenu items.

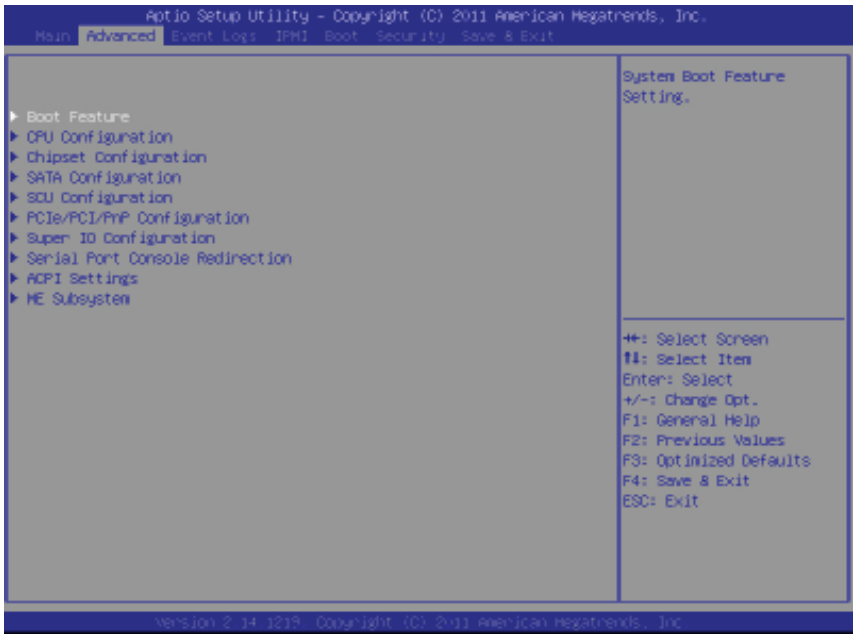

▶Boot Features

Quiet Boot

This feature allows the user to select bootup screen display between POST messages and the OEM logo. Select Disabled to display the POST messages. Select Enabled to display the OEM logo instead of the normal POST messages. The options are **Enabled** and Disabled.

AddOn ROM Display Mode

Use this item to set the display mode for the Option ROM. Select Keep Current to use the current AddOn ROM Display setting. Select Force BIOS to use the Option ROM display mode set by the system BIOS. The options are **Force BIOS** and Keep Current.

Bootup Num-Lock

Use this feature to set the Power-on state for the Numlock key. The options are Off and **On**.

Wait For 'F1' If Error

Select Enabled to force the system to wait until the 'F1' key is pressed if an error occurs. The options are Disabled and **Enabled**.

Interrupt 19 Capture

Interrupt 19 is the software interrupt that handles the boot disk function. When this item is set to Enabled, the ROM BIOS of the host adaptors will "capture" Interrupt 19 at bootup and allow the drives that are attached to these host adaptors to function as bootable disks. If this item is set to Disabled, the ROM BIOS of the host adaptors will not capture Interrupt 19, and the drives attached to these adaptors will not function as bootable devices. The options are **Enabled** and Disabled.

Re-try Boot

If this item is enabled, the BIOS will automatically attempt to boot from a specified boot device again after its initial failure to boot. The default setting is **Disabled**.

Power Configuration

Watch Dog Function

If enabled, the Watch Dog timer will allow the system to automatically reboot when a non-recoverable error occurs that lasts for more than five minutes. The options are Enabled and **Disabled.**

Power Button Function

If this feature is set to Instant Off, the system will power off immediately as soon as the user presses the power button. If this feature is set to 4 Seconds Override, the system will power off when the user presses the power button for 4 seconds or longer. The options are **Instant Off** and 4 Seconds Override.

Restore on AC Power Loss

Use this feature to set the power state after a power outage. Select Stay Off for the system power to remain off after a power loss. Select Power On for the system power to be turned on after a power loss. Select Last State to allow the system to resume its last state before a power loss. The options are Power On, Stay Off, and **Last State**.

CPU Configuration

This submenu displays the information of the CPU as detected by the BIOS. It also allows the user to configure CPU settings.

▶Socket 1 CPU Information/Socket 2 CPU Information

This submenu displays the following information regarding the CPUs installed in Socket 1/ Socket 2.

- Type of CPU

- CPU Signature
- Microcode Patch
- CPU Stepping
- Maximum CPU Speed
- Minimum CPU Speed
- Processor Cores
- Intel HT (Hyper-Threading) Technology
- Intel VT-x Technology
- Intel SMX Technology
- L1 Data Cache
- L1 Code Cache
- L2 Cache
- L3 Cache

CPU Speed

This item displays the speed of the CPU installed in Socket 1/Socket 2.

64-bit

This item indicates if the CPU installed in Socket 1 or Socket 2 supports 64-bit technology.

Clock Spread Spectrum

Select Enable to enable Clock Spectrum support, which will allow the BIOS to monitor and attempt to reduce the level of Electromagnetic Interference caused by the components whenever needed. The options are **Disabled** and Enabled.

RTID (Record Types IDs)

This feature displays the total number of Record Type IDs for local and remote pools. The options are **Optimal** and Alternate.

Hyper-threading

Select Enabled to support Intel Hyper-threading Technology to enhance CPU performance. The options are **Enabled** and Disabled.

Active Processor Cores

Set to Enabled to use a processor's second core and above. (Please refer to Intel's website for more information.) The options are **All,** 1, and 2.

Limit CPUID Maximum

This feature allows the user to set the maximum CPU ID value. Enable this function to boot the legacy operating systems that cannot support processors with extended CPUID functions. The options are Enabled and **Disabled** (for the Windows OS).

Execute-Disable Bit (Available if supported by the OS & the CPU)

Select Enabled to enable the Execute Disable Bit which will allow the processor to designate areas in the system memory where an application code can execute and where it cannot, thus preventing a worm or a virus from flooding illegal codes to overwhelm the processor or damage the system during an attack. The default is **Enabled**. (Refer to Intel and Microsoft Web sites for more information.)

Intel® AES-NI

Select Enable to use the Intel Advanced Encryption Standard (AES) New Instructions (NI) to ensure data security. The options are **Enabled** and Disabled.

MLC Streamer Prefetcher (Available when supported by the CPU)

If set to Enabled, the MLC (mid-level cache) streamer prefetcher will prefetch streams of data and instructions from the main memory to the L2 cache to improve CPU performance. The options are Disabled and **Enabled**.

MLC Spatial Prefetcher (Available when supported by the CPU)

If this feature is set to Disabled, The CPU prefetches the cache line for 64 bytes. If this feature is set to Enabled the CPU fetches both cache lines for 128 bytes as comprised. The options are Disabled and **Enabled**.

DCU Streamer Prefetcher (Available when supported by the CPU)

Select Enabled to support Data Cache Unit (DCU) prefetch of L1 data to speed up data accessing and processing in the DCU to enhance CPU performance. The options are Disabled and **Enabled**.

DCU IP Prefetcher

Select Enabled for DCU (Data Cache Unit) IP Prefetcher support, which will prefetch IP addresses to improve network connectivity and system performance. The options are **Enabled** and Disabled.

Intel® Virtualization Technology (Available when supported by the CPU)

Select Enabled to support Intel Virtualization Technology, which will allow one platform to run multiple operating systems and applications in independent partitions, creating multiple "virtual" systems in one physical computer. The options are **Enabled** and Disabled.

> **Note**: If there is any change to this setting, you will need to power off and restart the system for the change to take effect. Please refer to Intel's website for detailed information.)

▶ CPU Power Management Configuration

This submenu allows the user to configure the following CPU Power Management settings.

Power Technology

Select Energy Efficiency to support power-saving mode. Select Custom to customize system power settings. Select Disabled to disable power-saving settings. The options are Disabled, **Energy Efficient**, and Custom. If the option is set to Custom, the following items will display:

EIST (Available when Power Technology is set to Custom)

EIST (Enhanced Intel SpeedStep Technology) allows the system to automatically adjust processor voltage and core frequency to reduce power consumption and heat dissipation. The options are Disabled (GV3 Disabled), and **Enabled (GV3 Enabled)**. (**Note**: GV3 is Intel Speedstep support used on older platforms. Please refer to Intel's website for detailed information.)

C1E Support (Available when Power Technology is set to Custom)

Select Enabled to enable Enhanced C1 Power State to boost system performance. The options are **Enabled** and Disabled.

CPU C3 Report (Available when Power Technology is set to Custom)

Select Enabled to allow the BIOS to report the CPU C3 State (ACPI C2) to the operating system. During the CPU C3 State, the CPU clock generator is turned off. The options are Enabled and **Disabled.**

CPU C6 Report (Available when Power Technology is set to Custom)

Select Enabled to allow the BIOS to report the CPU C6 State (ACPI C3) to the operating system. During the CPU C6 State, the power to all cache is turned off. The options are **Enabled** and Disabled.

CPU C7 Report (Available when Power Technology is set to Custom)

Select Enabled to allow the BIOS to report the CPU C7 State (ACPI C3) to the operating system. CPU C7 State is a processor-specific low C-State. The options are **Enabled** and Disabled.

Package C-State limit (Available when Power Technology is set to Custom)

This feature allows the user to set the limit on the C-State package register. The options are C0, C2, **C6,** and No Limit.

Energy Performance Bias

Use this feature to select an appropriate fan setting to achieve maximum system performance (with maximum cooling) or maximum energy efficiency with maximum power saving). The fan speeds are controlled by the firmware management via IPMI 2.0. The options are Performance, **Balanced Performance**, Balanced Energy, and Energy Efficient.

Factory Long Duration Power Limit

This item displays the power limit (in watts) set by the manufacturer during which long duration power is maintained.

Long Duration Power Limit

This item displays the power limit (in watts) set by the user during which long duration power is maintained. The default setting is **0**.

Factory Long Duration Maintained

This item displays the period of time (in seconds) set by the manufacturer during which long duration power is maintained.

Long Duration Maintained

This item displays the period of time (in seconds) during which long duration power is maintained. The default setting is **0**.

Recommended Short Duration Power Limit

This item displays the short duration power settings (in watts) recommended by the manufacturer.

Short Duration Power Limit

During Turbo Mode, the system may exceed the processors default power setting and exceed the Short Duration Power limit. By increasing this value, the processor can provide better performance for short duration. This item displays the time period during which short duration power is maintained. The default setting is **0**.

▶Chipset Configuration

▶North Bridge

This feature allows the user to configure the settings for the Intel North Bridge.

▶Integrated IO Configuration

Intel VT-d

Select Enabled to enable Intel Virtualization Technology support for Direct I/O VT-d by reporting the I/O device assignments to the VMM (Virtual Machine Monitor) through the DMAR ACPI Tables. This feature offers fully-protected I/O resource sharing across Intel platforms, providing greater reliability, security and availability in networking and data-sharing. The options are **Enabled** and Disabled.

Intel® I/OAT

Select Enabled to enable Intel I/OAT (I/O Acceleration Technology), which significantly reduces CPU overhead by leveraging CPU architectural improvements and freeing the system resource for other tasks. The options are Disabled and **Enabled**.

DCA Support

When set to Enabled, this feature uses Intel's DCA (Direct Cache Access) Technology to improve data transfer efficiency. The default is **Enabled** and can not be changed.

IIO 1 PCIe Port Bifurcation Control

This submenu configures the following IO PCIe Port Bifurcation Control settings for IIO 1 PCIe ports to determine how the available PCI-Express lanes to be distributed between the PCI-Exp. Root Ports.

IOU3-PCIe Port

This feature allows the user to set the PCI-Exp bus speed between IOU3 and PCI-e port. The options are x4x4x4x4, x4x4x8, x8x4x4, and **x8x8**.

Port 3A Link Speed

Select GEN1 to enable PCI-Exp Generation 1 support for Port 3A. Select GEN2 to enable PCI-Exp Generation 2 support for Port 3A. Select GEN3 to enable PCI-Exp Generation 3 support for Port 3A. The options are GEN1, GEN2**,** and **GEN3**.

Port 3C Link Speed

Select GEN1 to enable PCI-Exp Generation 1 support for Port 3C. Select GEN2 to enable PCI-Exp Generation 2 support for Port 3C. Select GEN3 to enable PCI-Exp Generation 3 support for Port 3C. The options are GEN1, GEN2**,** and **GEN3**.

IIO 2 PCIe Port Bifurcation Control

This submenu configures the following IO PCIe Port Bifurcation Control settings for IIO 2 PCIe ports to determine how the available PCI-Express lanes to be distributed between the PCI-Exp. Root Ports.

IOU1-PCIe Port

This feature allows the user to set the PCI-Exp bus speed between IOU1 and PCI-e port. The options are x4x4, and **x8**.

Port 1A Link Speed

Select GEN1 to enable PCI-Exp Generation 1 support for Port 1A. Select GEN2 to enable PCI-Exp Generation 2 support for Port 1A. Select GEN3 to enable PCI-Exp Generation 3 support for Port 1A. The options are GEN1, GEN2**,** and **GEN3**.

IOU3-PCIe Port

This feature allows the user to set the PCI-Exp bus speed between IOU3 and PCI-e port. The options are x4x4x4x4, x4x4x8, x8x4x4, **x8x8**, and x16.

Port 3A Link Speed

Select GEN1 to enable PCI-Exp Generation 1 support for Port 3A. Select GEN2 to enable PCI-Exp Generation 2 support for Port 3A. Select GEN3 to enable PCI-Exp Generation 3 support for Port 3A. The options are GEN1, GEN2**,** and **GEN3**.

Port 3C Link Speed

Select GEN1 to enable PCI-Exp Generation 1 support for Port 3C. Select GEN2 to enable PCI-Exp Generation 2 support for Port 3C. Select GEN3 to enable PCI-Exp Generation 3 support for Port 3C. The options are GEN1, GEN2**,** and **GEN3**.

SXB1, SXB2 Slot CTLE Value

Use this feature to select the PCIE GEN3 CTLE value. The default value is **Auto**.

▶QPI Configuration

Current QPI Link Speed

This item displays the current status of the QPI Link.

Current QPI Link Frequency

This item displays the frequency of the QPI Link.

Isoc

Select Enabled to enable Isochronous support to meet QoS (Quality of Service) requirements. This feature is especially important for virtualization technology. The options are Enabled and **Disabled**.

QPI (Quick Path Interconnect) Link Speed Mode

Use this feature to select data transfer speed for QPI Link connections. The options are **Fast** and Slow.

QPI Link Frequency Select

Use this feature to select the desired QPI frequency. The options are **Auto**, 6.4 GT/s, 7.2 GT/s, and 8.0 GT/s.

▶DIMM Configuration

This section displays the following DIMM information.

Current Memory Mode

This item displays the current memory mode.

Current Memory Speed

This item displays the current memory speed.

Mirroring

This item displays if memory mirroring is supported by the motherboard. Memory mirroring creates a duplicate copy of the data stored in the memory to enhance data security.

Sparing

This item displays if memory sparing is supported by the motherboard. Memory sparing enhances system performance.

▶DIMM Information

This section displays the following DIMM information.

Memory Mode

When Independent is selected, all DIMMs are available to the operating system. When Mirroring is selected, the motherboard maintains two identical copies of all data in memory for data backup. When Lockstep is selected, the motherboard uses two areas of memory to run the same set of operations in parallel. The options are **Independent**, Mirroring, and Lockstep.

DRAM RAPL Mode

RAPL (Running Average Power Limit) provides mechanisms to enforce power consumption limits on supported processors The options are DRAM RAPL MODE0 , **DRAM RAPL MODE1**, and Disabled.

DDR Speed

Use this feature to force a DDR3 memory module to run at a frequency other than what is specified by the manufacturer. The options are **Auto**, Force DDR3-800, Force DDR3-1066, Force DDR3-1333, Force DDR3-1600 and Force SPD.

Channel Interleaving

This feature selects from the different channel interleaving methods. The options are **Auto**, 1 Way, 2 Way, 3, Way, and 4 Way.

Rank Interleaving

This feature allows the user to select a rank memory interleaving method. The options are **Auto**, 1 Way, 2 Way, 4, Way, and 8 Way.

Patrol Scrub

Patrol Scrubbing is a process that allows the CPU to correct correctable memory errors detected on a memory module and send the correction to the requestor (the original source). When this item is set to Enabled, the IO hub will read and write back one cache line every 16K cycles, if there is no delay caused by internal processing. By using this method, roughly 64 GB of memory behind the IO hub will be scrubbed every day. The options are **Enabled** and Disabled.

Demand Scrub

Demand Scrubbing is a process that allows the CPU to correct correctable memory errors found on a memory module. When the CPU or I/O issues a demand-read command, and the read data from memory turns out to be a correctable error, the error is corrected and sent to the requestor (the original

source). Memory is updated as well. Select Enabled to use Demand Scrubbing for ECC memory correction. The options are Enabled and **Disabled**.

Data Scrambling

Select Enabled to enable data scrambling to ensure data security and integrity. The options are Disabled and **Enabled**.

Device Tagging

Select Enabled to support device tagging. The options are **Disabled** and Enabled.

Thermal Throttling

Throttling improves reliability and reduces power consumption in the processor via automatic voltage control during processor idle states. The options are Disabled and **CLTT** (Closed Loop Thermal Throttling).

▶South Bridge Configuration

This feature allows the user to configure the settings for the Intel PCH chip.

PCH Information

This feature displays the following PCH information.

Name: This item displays the name of the PCH chip.

Stepping: This item displays the PCH stepping.

USB Devices: This item displays the USB devices detected by the BIOS.

All USB Devices

This feature enables all USB ports/devices. The options are Disabled and **Enabled**. (If set to Enabled, EHCI Controller 1 and Controller 2 will appear.)

EHCI Controller 1/EHCI Controller 2 (Available when All USB Devices is set to Enabled)

Select Enabled to enable EHCI (Enhanced Host Controller Interface) Controller 1 or Controller 2. The options are Disabled and **Enabled**.

Legacy USB Support (Available when USB Functions is not Disabled)

Select Enabled to support legacy USB devices. Select Auto to disable legacy support if USB devices are not present. Select Disabled to have USB devices available for EFI (Extensive Firmware Interface) applications only. The settings are Disabled, **Enabled** and Auto.

Port 60/64 Emulation

Select Enabled to enable I/O port 60h/64h emulation support for the legacy USB keyboard so that it can be fully supported by the operating systems that does not recognize a USB device. The options are Disabled and **Enabled**.

EHCI Hand-Off

This item is for operating systems that do not support Enhanced Host Controller Interface (EHCI) hand-off. When enabled, EHCI ownership change will be claimed by the EHCI driver. The options are **Disabled** and Enabled.

▶SATA Configuration

When this submenu is selected, the AMI BIOS automatically detects the presence of IDE or SATA devices and displays the following items.

SATA Port0~SATA Port5: The AMI BIOS displays the status of each SATA port as detected by the BIOS.

SATA Mode

Use this feature to configure SATA mode for a selected SATA port. The options are Disabled, IDE Mode, **AHCI Mode** and RAID Mode. The following are displayed depending on your selection:

IDE Mode

The following items are displayed when IDE Mode is selected:

Serial-ATA (SATA) Controller 0 and Serial-ATA (SATA) Controller 1

Use this feature to activate or deactivate the SATA controller, and set the compatibility mode. The options are Disabled, Enhanced, and Compatible. The default for SATA Controller 0 is **Compatible.** The default of SATA Controller 1 is **Enhanced**.

AHCI Mode

The following items are displayed when the AHCI Mode is selected.

Aggressive Link Power Management

When Enabled, the SATA AHCI controller manages the power usage of the SATA link. The controller will put the link in a low power mode during extended periods of I/O inactivity, and will return the link to an active state when I/O activity resumes. The options are **Enabled** and Disabled.

Port 0~5 Hot Plug

Select Enabled to enable hot-plug support for a particular port, which will allow the user to change a hardware component or device without shutting down the system. The options are **Enabled** and Disabled.

Staggered Spin Up

Select Enabled to enable Staggered Spin-up support to prevent excessive power consumption caused by multiple HDDs spinning-up simultaneously. The options are Enabled and **Disabled**.

RAID Mode

The following items are displayed when RAID Mode is selected:

Port 0~5 Hot Plug

Select Enabled to enable hot-plug support for the particular port. The options are **Enabled** and Disabled.

▶SCU (Storage Control Unit) Configuration

Storage Controller Unit

Select Enabled to enable PCH SCU storage devices. The options are Disabled and **Enabled**.

SCU RAID Option ROM

Select Enabled to support the onboard SCU Option ROM to boot up the system via a storage device. The options are Disabled and **Enabled**.

SCU Port 0~SCU Port 7: The AMI BIOS will automatically detect the onboard SCU devices and display the status of each SCU device as detected.

Note: iF boards only support SATA drives. 3F boards support both SATA and SAS drives

▶PCIe/PCI/PnP Configuration

PCI ROM Priority

Use this feature to select the Option ROM to boot the system when there are multiple Option ROMs available in the system. The options are EFI Compatible ROM and **Legacy ROM**.

PCI Latency Timer

Use this feature to set the latency Timer of each PCI device installed on a PCI bus. Select 64 to set the PCI latency to 64 PCI clock cycles. The options are 32, **64**, 96, 128, 160, 192, 224 and 248.

Above 4G Decoding (Available if the system supports 64-bit PCI decoding)

Select Enabled to decode a PCI device that supports 64-bit in the space above 4G Address. The options are Enabled and **Disabled**.

PERR# Generation

Select Enabled to allow a PCI device to generate a PERR number for a PCI Bus Signal Error Event. The options are Enabled and **Disabled**.

SERR# Generation

Select Enabled to allow a PCI device to generate an SERR number for a PCI Bus Signal Error Event. The options are Enabled and **Disabled**.

Maximum Payload

Select Auto to allow the system BIOS to automatically set the maximum payload value for a PCI-E device to enhance system performance. The options are **Auto**, 128 Bytes and 256 Bytes.

Maximum Read Request

Select Auto to allow the system BIOS to automatically set the maximum Read Request size for a PCI-E device to enhance system performance. The options are **Auto**, 128 Bytes, 256 Bytes, 512 Bytes, 1024 Bytes, 2048 Bytes, and 4096 Bytes.

ASPM Support

This feature allows the user to set the Active State Power Management (ASPM) level for a PCI-E device. Select Force L0s to force all PCI-E links to operate at L0s state. Select Auto to allow the system BIOS to automatically set the ASPM level for the system. Select Disabled to disable ASPM support. The options are **Disabled**, Force L0s, and Auto.

Warning: Enabling ASPM support may cause some PCI-E devices to fail!

Onboard LAN Option ROM Select

Select iSCSI to use the iSCSI Option ROM to boot the computer using a network device. Select PXE (Preboot Execution Environment) to use an PXE Option ROM to boot the computer using a network device. The options are iSCSI and **PXE**.

Load Onboard LAN1 Option ROM/Load Onboard LAN2 Option ROM

Select Enabled to enable the onboard LAN1 Option ROM~LAN2 Option ROM. This is to boot the computer using a network device. The default setting for LAN1 Option ROM is **Enabled**, and the default setting for LAN2 Option ROM is **Disabled**.

VGA Priority

This feature allows the user to select the graphics adapter to be used as the primary boot device. The options are **Onboard**, and Offboard.

▶Super IO Configuration

Super IO Chip: This item displays the Super IO chip used in the motherboard.

▶Serial Port 1 Configuration

Serial Port

Select Enabled to enable a serial port specified by the user. The options are **Enabled** and Disabled.

Device Settings

This item displays the settings of Serial Port 1.

Change Settings

This option specifies the base I/O port address and the Interrupt Request address of Serial Port 1. Select Disabled to prevent the serial port from accessing any system resources. When this option is set to Disabled, the serial port becomes unavailable. The options are **Auto**, IO=3F8h; IRQ=4; IO=3F8h; IRQ=3, 4, 5, 6, 7, 9, 10, 11, 12; IO=2F8h; IRQ=3, 4, 5, 6, 7, 9, 10, 11, 12; IO=3E8h; IRQ=3, 4, 5, 6, 7, 9, 10, 11, 12; and IO=2E8h; IRQ=3, 4, 5, 6, 7, 9, 10, 11, 12;

Device Mode

Use this feature to select the desired mode for a serial port specified. The options are **Normal** and High Speed.

▶Serial Port 2 Configuration

Serial Port

Select Enabled to enable a serial port specified by the user. The options are **Enabled** and Disabled.

Device Settings

This item displays the settings of Serial Port 2.

Change Settings

This option specifies the base I/O port address and the Interrupt Request address of Serial Port 1. Select Disabled to prevent the serial port from accessing any system resources. When this option is set to Disabled, the serial port becomes unavailable. The options are **Auto**, IO=3F8h; IRQ=4; IO=3F8h; IRQ=3, 4, 5, 6, 7, 9, 10, 11, 12; IO=2F8h; IRQ=3, 4, 5, 6, 7, 9, 10, 11, 12; IO=3E8h; IRQ=3, 4, 5, 6, 7, 9, 10, 11, 12; and IO=2E8h; IRQ=3, 4, 5, 6, 7, 9, 10, 11, 12;

Device Mode

Use this feature to select the desired mode for a serial port specified. The options are **Normal** and High Speed.

Serial Port 2 Attribute

Use this feature to select the attribute for serial port 2. The options are **SOL** (Serial On LAN), and COM.

▶Serial Port Console Redirection

COM 1/COM 2

These two submenus allow the user to configure the following Console Redirection settings for a COM Port specified by the user.

Console Redirection

Select Enabled to use a COM Port selected by the user for Console Redirection. The options are Enabled and Disabled. The default setting for COM1 is **Disabled**, and for COM2 is **Enabled**.

▶Console Redirection Settings

This feature allows the user to specify how the host computer will exchange data with the client computer, which is the remote computer used by the user.

Terminal Type

This feature allows the user to select the target terminal emulation type for Console Redirection. Select VT100 to use the ASCII Character set. Select VT100+ to add color and function key support. Select ANSI to use the Extended ASCII Character Set. Select VT-UTF8 to use UTF8 encoding to map Unicode characters into one or more bytes. The options are ANSI, VT100, **VT100+**, and VT-UTF8.

Bits Per second

Use this feature to set the transmission speed for a serial port used in Console Redirection. Make sure that the same speed is used in the host computer and the client computer. A lower transmission speed may be required for long and busy lines. The options are 9600, 19200, 38400, 57600 and **115200** (bits per second).

Data Bits

Use this feature to set the data transmission size for Console Redirection. The options are 7 Bits and **8 Bits**.

Parity

A parity bit can be sent along with regular data bits to detect data transmission errors. Select Even if the parity bit is set to 0, and the number of 1's in data bits is even. Select Odd if the parity bit is set to 0, and the number of 1's in data bits is odd. Select None if you do not want to send a parity bit with your data bits in transmission. Select Mark to add a mark as a parity bit to be sent along with the data bits. Select Space to add a Space as a parity bit to be sent with your data bits. The options are **None**, Even, Odd, Mark and Space.

Stop Bits

A stop bit indicates the end of a serial data packet. Select 1 Stop Bit for standard serial data communication. Select 2 Stop Bits if slower devices are used. The options are **1** and 2.

Flow Control

This feature allows the user to set the flow control for Console Redirection to prevent data loss caused by buffer overflow. Send a "Stop" signal to stop sending data when the receiving buffer is full. Send a "Start" signal to start sending data when the receiving buffer is empty. The options are **None** and Hardware RTS/CTS.

VT-UTF8 Combo Key Support

Select Enabled to enable VT-UTF8 Combination Key support for ANSI/VT100 terminals. The options are **Enabled** and Disabled**.**

Recorder Mode

Select Enabled to capture the data displayed on a terminal and send it as text messages to a remote server. The options are **Disabled** and Enabled.

Resolution 100x31

Select Enabled for extended-terminal resolution support. The options are Disabled and **Enabled**.

Legacy OS Redirection Resolution

Use this feature to select the number of rows and columns used in Console Redirection for legacy OS support. The options are 80x24 and **80x25**.

Putty KeyPad

This feature selects Function Keys and KeyPad settings for Putty, which is a terminal emulator designed for the Windows OS. The options are **VT100**, LINUX, XTERMR6, SC0, ESCN, and VT400.

Serial Port for Out-of-Band Management/Windows Emergency Management Services (EMS)

The submenu allows the user to configure Console Redirection settings to support Out-of-Band Serial Port management.

Console Redirection (for EMS)

Select Enabled to use a COM Port selected by the user for Console Redirection. The options are **Enabled** and Disabled.

▶Console Redirection Settings (for EMS)

This feature allows the user to specify how the host computer will exchange data with the client computer, which is the remote computer used by the user.

Out-of-Band Management Port

The feature selects a serial port used by the Microsoft Windows Emergency Management Services (EMS) to communicate with a remote server. The options are **COM1** and COM2.

Terminal Type

This feature allows the user to select the target terminal emulation type for Console Redirection. Select VT100 to use the ASCII character set. Select VT100+ to add color and function key support. Select ANSI to use the extended ASCII character set. Select VT-UTF8 to use UTF8 encoding to map Unicode characters into one or more bytes. The options are ANSI, VT100, **VT100+**, and VT-UTF8.

Bits Per Second

This item sets the transmission speed for a serial port used in Console Redirection. Make sure that the same speed is used in the host computer and the client computer. A lower transmission speed may be required for long and busy lines. The options are 9600, 19200, 57600, and **115200** (bits per second).

Flow Control

This feature allows the user to set the flow control for Console Redirection to prevent data loss caused by buffer overflow. Send a "Stop" signal to stop sending data when the receiving buffer is full. Send a "Start" signal to start sending data when the receiving buffer is empty. The options are **None,** Hardware RTS/CTS, and Software Xon/Xoff.

Data Bits, Parity, Stop Bits

The status of these features is displayed.

▶ACPI Settings

Use this feature to configure Advanced Configuration and Power Interface (ACPI) power management settings for your system.

ACPI Sleep State

Use this feature to select the ACPI State when the system is in sleep mode. Select S1 (CPU Stop Clock) to erase all CPU caches and stop executing instructions. Power to the CPU(s) and RAM is maintained, but RAM is refreshed. Select Suspend Disabled to use power-reduced mode. Power will only be supplied to limited components (such as RAMs) to maintain the most critical functions of the system. The options are **S1 (CPU Stop Clock)**, and Suspend Disabled.

NUMA (NON-Uniform Memory Access)

This feature enables the Non-Uniform Memory Access ACPI support. The options are **Enabled** and Disabled.

High Precision Event Timer

Select Enabled to activate the High Precision Event Timer (HPET) that produces periodic interrupts at a much higher frequency than a Real-time Clock (RTC) does in synchronizing multimedia streams, providing smooth playback, reducing the dependency on other timestamp calculation devices, such as an x86 RDTSC Instruction embedded in the CPU. The High Performance Event Timer is used to replace the 8254 Programmable Interval Timer. The options are **Enabled** and Disabled.

▶Trusted Computing (Available when a TPM device is detected by the BIOS)

Configuration

TPM Support

Select Enabled on this item and enable the TPM jumper on the motherboard to enable TPM support to improve data integrity and network security. The options are **Enabled** and Disabled.

TPM State

Select Enabled to enable TPM security settings to improve data integrity and network security. The options are Disabled and **Enabled**.

Pending Operation

Use this item to schedule an operation for the security device. The options are **None**, Enable Take Ownership, Disable Take Ownership, and TPM Clear.

Note: During restart, the computer will reboot in order to execute the pending operation and change the state of the security device.

Current Status Information: This item displays the information regarding the current TPM status.

TPM Enable Status

This item displays the status of TPM Support to indicate if TPM is currently enabled or disabled.

TPM Active Status

This item displays the status of TPM Support to indicate if TPM is currently active or deactivated.

TPM Owner Status

This item displays the status of TPM Ownership.

▶Intel TXT (LT-SX) Configuration

Intel TXT (LT-SX) Hardware Support

This feature indicates if the following hardware components support the Intel Trusted Execution Technology.

CPU: TXT (Trusted Execution Technology) Feature

Chipset: TXT (Trusted Execution Technology) Feature

Intel TXT (LT-SX) Configuration

This feature displays the following TXT configuration setting.

TXT (LT-SX) Support: This item indicates if the Intel TXT support is enabled or disabled. The default setting is **Disabled**.

Intel TXT (LT-SX) Dependencies

This feature displays the features that need to be enabled for the Intel Trusted Execution Technology to work properly in the system.

VT-d Support: Intel Virtualization Technology with Direct I/O support

VT Support: Intel Virtualization Technology support

TPM Support: Trusted Platform support

TPM State: Trusted Platform state

Intel TXT (LT-SX) Dependencies

This feature displays the features that need to be enabled for the Intel Trusted Execution Technology to work properly in the system.

VT-d Support: Intel Virtualization Technology with Direct I/O support

VT Support: Intel Virtualization Technology support

TPM Support: Trusted Platform support

TPM State: Trusted Platform state

▶ME Subsystem

This feature displays the following ME Subsystem Configuration settings.

- **ME BIOS Interface Version**
- **ME Version**

7-4 Event Logs

Use this feature to configure Event Log settings.

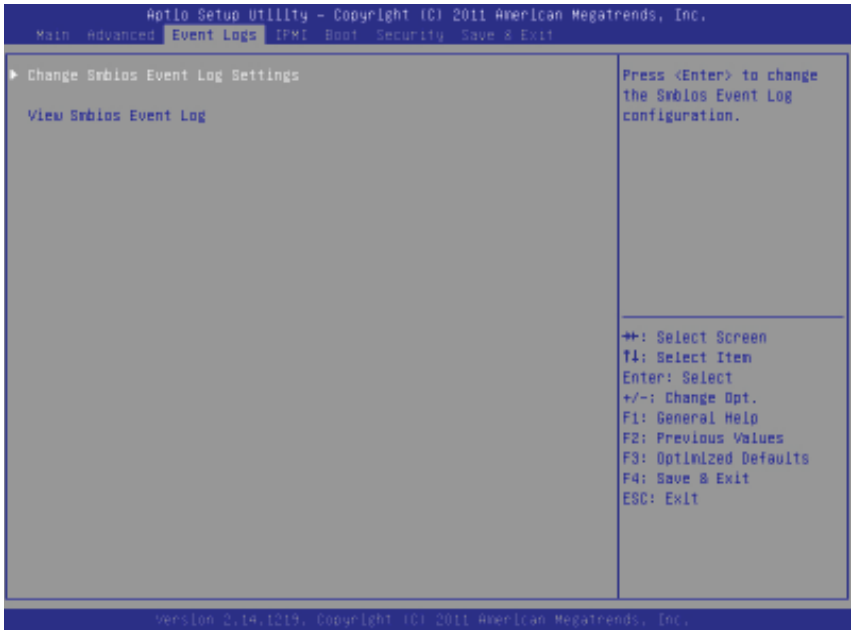

▶Change SMBIOS Event Log Settings

This feature allows the user to configure SMBIOS Event settings.

Enabling/Disabling Options

SMBIOS Event Log

Select Enabled to enable SMBIOS (System Management BIOS) Event Logging during system boot. The options are **Enabled** and Disabled.

Runtime Error Logging Support

Select Enabled to support Runtime Error Logging. The options are **Enabled** and Disabled.

Memory Correctable Error Threshold

This feature allows the user to enter the threshold value for correctable memory errors. The default setting is **10**.

PCI Error Logging Support

Select Enabled to support error event logging for PCI slots. The options are Enabled and **Disabled**.

Erasing Settings

Erase Event Log

Select Enabled to erase the SMBIOS (System Management BIOS) Event Log, which is completed before an event logging is initialized upon system reboot. The options are **No**, Yes, next reset, and Yes, every reset.

When Log is Full

Select Erase Immediately to immediately erase SMBIOS error event logs that exceed the limit when the SMBIOS event log is full. Select Do Nothing for the system to do nothing when the SMBIOS event log is full. The options are **Do Nothing** and Erase Immediately.

SMBIOS Event Log Standard Settings

Log System Boot Event

Select Enabled to log system boot events. The options are **Disabled** and Enabled.

MECI (Multiple Event Count Increment)

Enter the increment value for the multiple event counter. Enter a number between 1 to 255. The default setting is **1**.

METW (Multiple Event Count Time Window)

This item allows the user to decide how long (in minutes) should the multiple event counter wait before generating a new event log. Enter a number between 0 to 99. The default setting is **60**.

View SMBIOS Event Log

This item allows the user to view the event in the SMBIOS event log. Select this item and press <Enter> to view the status of an event in the log.

Date/Time/Error Code/Severity

7-5 IPMI

Use this feature to configure Intelligent Platform Management Interface (IPMI) settings.

IPMI Firmware Revision

This item indicates the IPMI firmware revision used in your system.

IPMI Status

This item indicates the status of the IPMI firmware installed in your system.

▶System Event Log

Enabling/Disabling Options

SEL Components

Select Enabled for all system event logging at bootup. The options are **Enabled** and Disabled.

Erasing Settings

Erase SEL

Select Yes, On next reset to erase all system event logs upon next system reboot. Select Yes, On every reset to erase all system event logs upon each system reboot. Select No to keep all system event logs after each system reboot. The options are **No,** Yes, On next reset, and Yes, On every reset.

When SEL is Full

This feature allows the user to decide what the BIOS should do when the system event log is full. Select Erase Immediately to erase all events in the log when the system event log is full. The options are **Do Nothing** and Erase Immediately.

Custom EFI Logging Options

Log EFI Status Codes

Select Enabled to log EFI (Extensible Firmware Interface) Status Codes, Error Codes or Progress Codes. The options are **Enabled** and Disabled.

Note: After making changes on a setting, be sure to reboot the system for the changes to take effect.

▶BMC Network Configuration

LAN Channel 1: This feature allows the user to configure the settings for LAN1 Port.

Update IPMI LAN Configuration

This feature allows the BIOS to implement any IP/MAC address changes at the next system boot. If the option is set to Yes, any changes made to the settings below will take effect when the system is rebooted. The options are **No** and Yes.

Configuration Address Source

This feature allows the user to select the source of the IP address for this computer. If Static is selected, you will need to know the IP address of this computer and enter it to the system manually in the field. If DHCP is selected, the BIOS will search for a DHCP (Dynamic Host Configuration Protocol) server in the network that is attached to and request the next available IP address for this computer. The options are **DHCP** and Static. The following items are assigned IP addresses automatically if DHCP is selected, or can be configured manually if Static is selected.

Station IP Address

This item displays the Station IP address for this computer. This should be in decimal and in dotted quad form (i.e., 192.168.10.253).

Subnet Mask

This item displays the sub-network that this computer belongs to. The value of each three-digit number separated by dots should not exceed 255.

Station MAC Address

This item displays the Station MAC address for this computer. Mac addresses are 6 two-digit hexadecimal numbers.

Gateway IP Address

This item displays the Gateway IP address for this computer. This should be in decimal and in dotted quad form (i.e., 192.168.10.253).

7-6 Boot

This submenu allows the user to configure the following boot settings for the system.

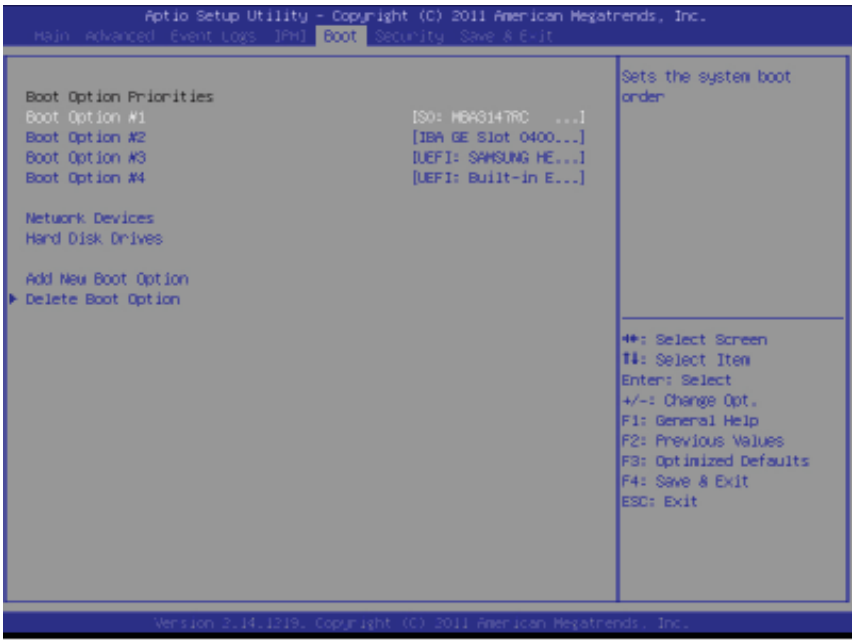

Boot Option Priorities

Boot Option #1/ Boot Option #2/ Boot Option #3, etc.

Use this feature to specify the sequence of boot device priority.

Network Devices, Hard Disk Drives

This option sets the order of the legacy network and hard disk devices detected by the motherboard.

Add New Boot Option

This feature allows the user to add a new EFI boot option to the boot order.

▶Delete Boot Option

This feature allows the user to select a boot device to delete from the boot priority list.

Delete Boot Option

Select the desired boot device to delete.

7-7 Security

This menu allows the user to configure the following security settings for the system.

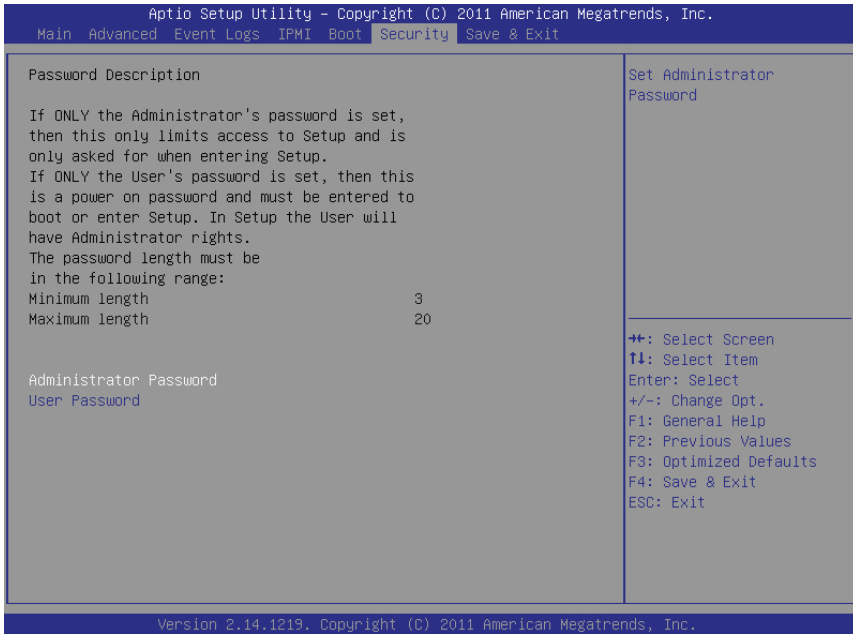

Administrator Password

Use this feature to set the Administrator Password which is required to enter the BIOS setup utility. The length of the password should be from 3 characters to 20 characters long.

User Password

Use this feature to set a User Password which is required to log into the system and to enter the BIOS setup utility. The length of the password should be from 3 characters to 20 characters long.

7-8 Save & Exit

This submenu allows the user to configure the Save and Exit settings for the system.

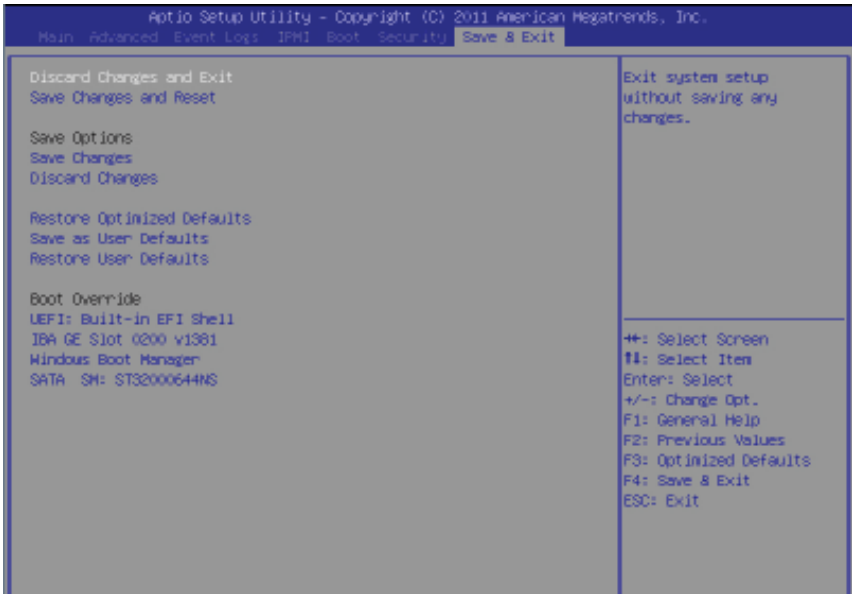

Discard Changes and Exit

Select this option to quit the BIOS Setup without making any permanent changes to the system configuration, and reboot the computer. Select Discard Changes and Exit, and press <Enter>. When the dialog box appears, asking you if you want to exit the BIOS setup without saving, select **Yes** to quit BIOS without saving the changes, or select No to quit the BIOS and save changes.

Save Changes and Reset

When you have completed the system configuration changes, select this option to save the changes and reboot the computer so that the new system configuration settings can take effect. Select Save Changes and Exit, and press <Enter>. When the dialog box appears, asking you if you want to exit the BIOS setup without saving, select **Yes** to quit BIOS without saving the changes, or select No to quit the BIOS and save changes.

Save Options

Save Changes

Select this option and press <Enter> to save all changes you've done so far and return to the AMI BIOS utility Program. When the dialog box appears, asking you if you want to save configuration, select **Yes** to save the changes, or select No to return to the BIOS without making changes.

Discard Changes

Select this feature and press <Enter> to discard all the changes and return to the BIOS setup. When the dialog box appears, asking you if you want to load previous values, select **Yes** to load the values previous saved, or select No to keep the changes you've made so far.

Restore Optimized Defaults

Select this feature and press <Enter> to load the optimized default settings that help optimize system performance. When the dialog box appears, asking you if you want to load optimized defaults, select **Yes** to load the optimized default settings, or select No to abandon optimized defaults.

Save as User Defaults

Select this feature and press <Enter> to save the current settings as the user's defaults. When the dialog box appears, asking you if you want to save values as user's defaults, select **Yes** to save the current values as user's default settings, or select No to keep the defaults previously saved as the user's defaults.

Restore User Defaults

Select this feature and press <Enter> to load the user's defaults previously saved in the system. When the dialog box appears, asking you if you want to restore user's defaults, select **Yes** to restore the user's defaults previously saved in the system, or select No to abandon the user's defaults that were previously saved.

Boot Override

This feature allows the user to override the Boot Option Priorities setting in the Boot menu, and instead immediatley boot the system with one of the listed devices. This is a one-time override

Appendix A

BIOS Error Beep Codes

During the POST (Power-On Self-Test) routines, which are performed at each system boot, errors may occur.

Non-fatal errors are those which, in most cases, allow the system to continue to boot. The error messages normally appear on the screen.

Fatal errors will not allow the system to continue with bootup procedure. If a fatal error occurs, you should consult with your system manufacturer for possible repairs.

These fatal errors are usually communicated through a series of audible beeps. The numbers on the fatal error list correspond to the number of beeps for the corresponding error.

BIOS Error Beep Codes		
Beep Code/LED	**Error Message**	**Description**
1 beep	Refresh	Ready to boot
5 short beeps + 1 long beep	Memory error	No memory detected in the system
5 beeps	No Con-In or No Con-Out devices	Con-In: USB or PS/2 keyboard, PCI or Serial Console Redirection, IPMI KVM or SOL Con-Out: Video Controller, PCI or Serial Console Redirection, IPMI SOL
X9 IPMI Error Codes		
1 Continuous Beep	System OH	System Overheat

Notes

Appendix B

System Specifications

Processors

Single or dual Intel® E5-2400 Series processors in LGA1356 sockets

Note: Please refer to our web site for a complete listing of supported processors.

Chipset

Intel C602 chipset

BIOS

128 Mb AMI® Flash EEPROM

Memory Capacity

Twelve DIMM sockets support up to 384 GB of registered ECC RDIMM/LRDIMM or up to 96 GB of ECC/non-ECC UDIMM DDR3-1600/1333/1066/800 memory

See the memory section in Chapter 5 for details.

SATA Controller

Intel on-chip controller for 10-port Serial ATA (2x SATA 3.0 and 8x SATA 2.0, RAID 0, 1 5 and 10 supported)

Drive Bays

Four hot-swap drive bays to house four SATA or SAS drives (SAS requires optional UIO SAS controller card)

Expansion Slots

One PCI-Express 3.0 x16 and 0ne PCI-Express 3.0 x8 expansion card with the use of included RSC-R1UU-E8E16 riser card

Serverboard

X9DBU-iF (Proprietary form factor)
Dimensions: 12 x 13.05 in (305 x 331 mm)

Chassis

SC813T-600UB (1U rackmount)
Dimensions: (WxHxD) 17.2 x 1.7 x 25.6 in. (437 x 43 x 650 mm)
Weight (gross): 23 lbs. (10.5 kg.)

System Cooling

Two 10-cm blower fans

System Input Requirements

AC Input Voltage: 100-240V AC auto-range
Rated Input Current: 5.5 - 4A (100-140V) to 3.5 - 2.5A (180-240V)
Rated Input Frequency: 50 to 60 Hz

Power Supply

Rated Output Power: 600W (Part# PWS-601-1H)
Rated Output Voltages: +3.3V (16A), +5V (20A), +12V (49A), -12V (.5A), +5Vsb (3A)

Operating Environment

Operating Temperature: 10º to 35º C (32º to 95º F)
Non-operating Temperature: -40º to 60º C (-40º to 140º F)
Operating Relative Humidity: 8% to 90% (non-condensing)
Non-operating Relative Humidity: 5% to 95% (non-condensing)

Regulatory Compliance

Electromagnetic Emissions: FCC Class A, EN 55022 Class A, EN 61000-3-2/-3-3, CISPR 22 Class A

Electromagnetic Immunity: EN 55024/CISPR 24, (EN 61000-4-2, EN 61000-4-3, EN 61000-4-4, EN 61000-4-5, EN 61000-4-6, EN 61000-4-8, EN 61000-4-11)

Safety: CSA/EN/IEC/UL 60950-1 Compliant, UL or CSA Listed (USA and Canada), CE Marking (Europe)

California Best Management Practices Regulations for Perchlorate Materials: This Perchlorate warning applies only to products containing CR (Manganese Dioxide) Lithium coin cells. “Perchlorate Material-special handling may apply. See www.dtsc.ca.gov/hazardouswaste/perchlorate”

Notes

(continued from front)

The products sold by Supermicro are not intended for and will not be used in life support systems, medical equipment, nuclear facilities or systems, aircraft, aircraft devices, aircraft/emergency communication devices or other critical systems whose failure to perform be reasonably expected to result in significant injury or loss of life or catastrophic property damage. Accordingly, Supermicro disclaims any and all liability, and should buyer use or sell such products for use in such ultra-hazardous applications, it does so entirely at its own risk. Furthermore, buyer agrees to fully indemnify, defend and hold Supermicro harmless for and against any and all claims, demands, actions, litigation, and proceedings of any kind arising out of or related to such ultra-hazardous use or sale.