SUPERSERVER
2027PR-HC0R
2027PR-HC0FR
2027PR-HC0TR

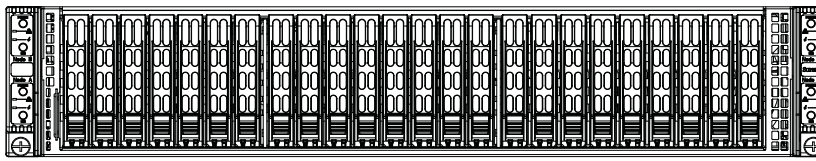

USER'S MANUAL

Revision 1.0

The information in this User's Manual has been carefully reviewed and is believed to be accurate. The vendor assumes no responsibility for any inaccuracies that may be contained in this document, makes no commitment to update or to keep current the information in this manual, or to notify any person or organization of the updates. **Please Note: For the most up-to-date version of this manual, please see our web site at www.supermicro.com.**

Super Micro Computer, Inc. ("Supermicro") reserves the right to make changes to the product described in this manual at any time and without notice. This product, including software and documentation, is the property of Supermicro and/or its licensors, and is supplied only under a license. Any use or reproduction of this product is not allowed, except as expressly permitted by the terms of said license.

IN NO EVENT WILL SUPERMICRO BE LIABLE FOR DIRECT, INDIRECT, SPECIAL, INCIDENTAL, SPECULATIVE OR CONSEQUENTIAL DAMAGES ARISING FROM THE USE OR INABILITY TO USE THIS PRODUCT OR DOCUMENTATION, EVEN IF ADVISED OF THE POSSIBILITY OF SUCH DAMAGES. IN PARTICULAR, SUPERMICRO SHALL NOT HAVE LIABILITY FOR ANY HARDWARE, SOFTWARE, OR DATA STORED OR USED WITH THE PRODUCT, INCLUDING THE COSTS OF REPAIRING, REPLACING, INTEGRATING, INSTALLING OR RECOVERING SUCH HARDWARE, SOFTWARE, OR DATA.

Any disputes arising between manufacturer and customer shall be governed by the laws of Santa Clara County in the State of California, USA. The State of California, County of Santa Clara shall be the exclusive venue for the resolution of any such disputes. Super Micro's total liability for all claims will not exceed the price paid for the hardware product.

FCC Statement: This equipment has been tested and found to comply with the limits for a Class A digital device pursuant to Part 15 of the FCC Rules. These limits are designed to provide reasonable protection against harmful interference when the equipment is operated in a commercial environment. This equipment generates, uses, and can radiate radio frequency energy and, if not installed and used in accordance with the manufacturer's instruction manual, may cause harmful interference with radio communications. Operation of this equipment in a residential area is likely to cause harmful interference, in which case you will be required to correct the interference at your own expense.

California Best Management Practices Regulations for Perchlorate Materials: This Perchlorate warning applies only to products containing CR (Manganese Dioxide) Lithium coin cells. "Perchlorate Material-special handling may apply. See www.dtsc.ca.gov/hazardouswaste/perchlorate"

WARNING: Handling of lead solder materials used in this product may expose you to lead, a chemical known to the State of California to cause birth defects and other reproductive harm.

Manual Revision 1.0
Release Date: October 22, 2014

Unless you request and receive written permission from Super Micro Computer, Inc., you may not copy any part of this document.

Information in this document is subject to change without notice. Other products and companies referred to herein are trademarks or registered trademarks of their respective companies or mark holders.

Copyright © 2014 by Super Micro Computer, Inc.
All rights reserved.
Printed in the United States of America

Preface

About This Manual

This manual is written for professional system integrators and PC technicians. It provides information for the installation and use of the SuperServer 2027PR-HC0R-HC0TR-HC0FR. Installation and maintainance should be performed by experienced technicians only.

The SuperServer 2027PR-HC0R-HC0TR-HC0FR is a high-end server based on the SC217HQ+-R2K02B 2U rackmount chassis and the X9DRT-P/PIBF/PT dual processor serverboards with the BPN-ADP-S3008L-L6IP LSI 3008 SAS adapter card for SAS drives. All models have an IPMI LAN port and four serverboard nodes, each with six hot-swap Hard Disk Drives (HDD) each per node.

Each of the various models of the SuperServer 2027PR-HC0R-HC0TR-HC0FR servers and their associated serverboards for each of their unique options are listed in the table below:

SUPERSERVER 2027PR-HC0R-HC0TR-HC0FR Model Variations			
Server Model	**X9DRT Serverboard**	**InfiniBand**	**10G Ethernet**
2027PR-HC0R	X9DRT-P		
2027PR-HC0FR	X9DRT-PIBF	YES	
2027PR-HC0TR	X9DRT-PT		YES

Manual Organization

Chapter 1: Introduction

The first chapter provides a checklist of the main components included with the server system and describes the main features of the X9DRT-P/PIBF/PT serverboard and the SC217HQ+-R2K02B chassis.

Chapter 2: Server Installation

This chapter describes the steps necessary to install the SuperServer 2027PR-HC0R-HC0TR-HC0FR into a rack and check out the server configuration prior to powering up the system. If your server was ordered without processor and memory components, this chapter will refer you to the appropriate sections of the manual for their installation.

Chapter 3: System Interface

Refer here for details on the system interface, which includes the functions and information provided by the control panel on the chassis as well as other LEDs located throughout the system.

Chapter 4: System Safety

You should thoroughly familiarize yourself with this chapter for a general overview of safety precautions that should be followed when installing and servicing the SuperServer 2027PR-HC0R-HC0TR-HC0FR.

Chapter 5: Advanced Serverboard Setup

Chapter 5 provides detailed information on the X9DRT-P/PIBF/PT serverboard, including the locations and functions of connections, headers and jumpers. Refer to this chapter when adding or removing processors or main memory and when reconfiguring the serverboard.

Chapter 6: Advanced Chassis Setup

Refer to Chapter 6 for detailed information on the SC217HQ+-R2K02B server chassis. You should follow the procedures given in this chapter when installing, removing or reconfiguring SATA or peripheral drives and when replacing system power supply units and cooling fans.

Chapter 7: BIOS

The BIOS chapter includes an introduction to BIOS and provides detailed information on running the CMOS Setup Utility.

Appendix A: BIOS Error Beep Codes

Appendix B: System Specifications

Notes

Table of Contents

Chapter 1 Introduction

1-1 Overview 1-1
1-2 Serverboard Features 1-2
Processors 1-2
Memory 1-2
SAS 1-2
PCI Expansion Slots 1-2
Ethernet Ports 1-3
Onboard Controllers/Ports 1-3
Graphics Controller 1-3
InfiniBand 1-3
Other Features 1-3
1-3 Server Chassis Features 1-4
System Power 1-4
SAS Subsystem 1-4
Front Control Panel 1-4
I/O Ports 1-4
Cooling System 1-4
Air Shrouds 1-5
Mounting Rails 1-5
1-4 Advanced Power Management 1-5
Intel® Intelligent Power Node Manager (IPNM) 1-5
Manageability Engine (ME) 1-5
1-4 Contacting Supermicro 1-7
1-5 2U Twin^2: System Notes 1-8
Nodes 1-8
System Power 1-8
SAS Backplane/Drives 1-8

Chapter 2 Server Installation

2-1 Overview 2-1
2-2 Unpacking the System 2-1
2-3 Preparing for Setup 2-1
Choosing a Setup Location 2-2
2-4 Warnings and Precautions 2-2
Rack Precautions 2-2
Server Precautions 2-2

Rack Mounting Considerations 2-3
Ambient Operating Temperature 2-3
Reduced Airflow 2-3
Mechanical Loading 2-3
Circuit Overloading 2-3
Reliable Ground 2-4
2-5 Installing the System into a Rack 2-4
Identifying the Sections of the Rack Rails 2-4
Locking Tabs 2-6
Releasing the Inner Rail 2-6
Installing The Inner Rails on the Chassis 2-7
Installing the Outer Rails on the Rack 2-8
Standard Chassis Installation 2-9
2-6 Checking the Serverboard Setup 2-10
2-7 Checking the Drive Bay Setup 2-12

Chapter 3 System Interface

3-1 Overview 3-1
3-2 Control Panel Buttons 3-2
Power 3-2
UID 3-2
3-3 Control Panel LEDs 3-2
NIC 3-2
Information LED 3-3
3-4 Drive Carrier LEDs 3-3

Chapter 4 Standardized Warning Statements for AC Systems

4-1 About Standardized Warning Statements 4-1
Warning Definition 4-1
Installation Instructions 4-4
Circuit Breaker 4-5
Power Disconnection Warning 4-6
Equipment Installation 4-8
Restricted Area 4-9
Battery Handling 4-10
Redundant Power Supplies 4-12
Backplane Voltage 4-13
Comply with Local and National Electrical Codes 4-14
Product Disposal 4-15
Hot Swap Fan Warning 4-16
Power Cable and AC Adapter 4-18

Chapter 5 Advanced Serverboard Setup

5-1 Handling the Serverboard 5-1
Precautions 5-1
Unpacking 5-1
5-2 Connecting Cables 5-2
Connecting Data Cables 5-2
5-3 Rear I/O Ports 5-2
5-4 Processor and Heatsink Installation 5-3
Installing a Passive CPU Heatsink 5-6
Removing the Heatsink 5-7
5-5 Installing Memory 5-8
Memory Support 5-8
Maximum Memory 5-9
5-6 Adding PCI Expansion Cards 5-12
5-7 Serverboard Details 5-13
5-8 Connector Definitions 5-16
5-9 Jumper Settings 5-20
Explanation of Jumpers 5-20
5-10 Onboard Indicators 5-23
5-11 PCI-Express and Serial ATA Connections 5-25
5-12 Installing Software 5-26
SuperDoctor 5 5-27
5-13 Serverboard Battery 5-29

Chapter 6 Advanced Chassis Setup

6-1 Static-Sensitive Devices 6-1
Precautions 6-1
Unpacking 6-1
6-2 Removing the Power Cord 6-2
6-3 Control Panel 6-2
6-4 Chassis Cover 6-3
6-5 Air Shrouds 6-4
6-6 Checking the Airflow 6-5
6-7 System Fans 6-5
6-8 Removing and Installing the Backplane 6-7
Removing the Backplane 6-7
Installing the Backplane 6-9

6-9 Installing the Serverboard 6-10
Compatible Motherboards 6-10
Permanent and Optional Standoffs 6-10
Installing an Adapter Card 6-12
6-10 Adding an Expansion Card 6-13
Installing the Riser Card 6-14
6-11 Drive Bay Installation/Removal 6-16
Accessing the Drive Bays 6-16
6-12 Power Supply 6-19
Power Supply Replacement 6-19

Chapter 7 BIOS

Starting BIOS Setup Utility 7-1
How To Change the Configuration Data 7-1
Starting the Setup Utility 7-2
7-1 Main Setup 7-2
7-2 Advanced Setup Configurations 7-4
7-3 Event Logs 7-28
7-4 IPMI 7-30
7-5 Boot 7-32
7-6 Security 7-34
7-7 Save & Exit 7-35

Appendix A BIOS Error Beep Codes

Appendix B System Specifications

Notes

Chapter 1

Introduction

1-1 Overview

The SuperServer 2027PR-HC0R-HC0TR-HC0FR is a high-end server comprised of two main subsystems: the SC217HQ+-R2K02B 2U server chassis and the X9DRT-P/PIBF/PT dual processor serverboard. Please refer to our web site for information on operating systems that have been certified for use with the system (www.supermicro.com).

In addition to the serverboard and chassis, various hardware components have been included with the 2027PR-HC0R-HC0TR-HC0FR server, as listed below:

- Four (4) Mylar air shrouds for TwinPro SC217HQ+-R2K02B (MCP-310-21702-0B)
- Four (4) 80x80x38mm 13.8K RPM chassis middle fan (FAN-0136L4)
- Heat Sinks
  Four (4) 1U passive CPU heat sinks for rear CPU (SNK-P0047PSM)
  Four (4) 1U passive CPU heat sinks w/narrow ILM (SNK-P0057PS)
- One (1) Power Distributor Board (PDB-PT217-S2412)
- SAS/SATA Backplane:
  One (1) Twin square backplane, supporting 24 SATA3/SAS3 HDD (2.5") with hot swapping (BPN-SAS3-217HQ)
  Four (4) LSI 3008, SAS 12-Gbps (X6 port inside) adapter cards (BPN-ADP-S3008L-L6IP-O-P)
  Twenty-four (24) hot-swap 2.5" HDD trays (MCP-220-00047-0B)
- Four (4) Riser cards (RSC-R1UTP-E16R)
- One (1) rails set (MCP-290-00053-0N)

Note: For your system to work properly, please follow the links below to download all necessary drivers/utilities and the user's manual for your server.

- Supermicro product manuals: http://www.supermicro.com/support/manuals/
- Product drivers and utilities: ftp://ftp.supermicro.com
- Product safety information:
  http://super-dev/about/policies/safety_information.cfm
- If you have any questions, please contact our support team at:
  support@supermico.com

1-2 Serverboard Features

At the heart of the 2027PR-HC0R-HC0TR-HC0FR server lies the X9DRT-P/PIBF/PT, a dual processor serverboard based on the Intel® C602 PCH chipset and is designed to provide maximum performance. Four of these serverboards can be mounted in the SC217HQ+-R2K02B chassis.

The sections below cover the main features of the X9DRT-P/PIBF/PT serverboard (see Figure 1-1 for a block diagram of the chipset).

Processors

The X9DRT-P/PIBF/PT supports single or dual Intel Xeon® E5-2600 (V2) series processors (Socket R LGA 2011). Please refer to the serverboard description pages on our web site for a complete listing of supported processors (www.supermicro.com). Each processor supports two full-width Intel QuickPath Interconnect (QPI) links with a Data Transfer Rate of up to 8 GT/s per QPI.

Memory

The X9DRT-P/PIBF/PT has sixteen (16) DIMM slots supporting up to 1 TB of 240-pin Registered (RDIMM)/Load Reduced (LRDIMM) ECC or Unbuffered (UDIMM) ECC/Non-ECC DDR3-1866/1600/1333/1066/800 MHz speed 4-channel memory in up to 1 GB, 2 GB, 4 GB, 8 GB, 16 GB or 32 GB sizes at 1.35V or 1.5V voltages. See Chapter 5 for further details.

Note: For the latest CPU/memory updates, please refer to our website at http://www.supermicro.com/products/serverboard.

SAS

For each serverboard, a BPN-ADP-S3008L-L6IP adapter card with a SAS3 LSI 3008 controller is included to provide six 12Gb/s ports. RAID 0, 1, 1E/10 is supported and the SAS drives are hot-swappable.

Note: Your operating system must have RAID support to enable the hotswap capability and RAID function of the SAS drives.

Note: In order to support the LSI RAID Controllers, both CPU sockets must be populated.

PCI Expansion Slots

The SuperServer 2027PR-HC0R-HC0TR-HC0FR has for each node one (1) PCI Express 3.0 x16 slot (Slot 1) available for use with a riser card.

Ethernet Ports

One Intel i350 Gigabit (10/100/1000 Mb/s) Ethernet Controller is integrated into all the serverboards for Gigabit Ethernet connections (G_LAN Port1) in the 2027PR-HC0R and 2027PR-HC0FR servers. Alternately, one Intel X540 10_Gigabit Ethernet Controller is integrated on the serverboard for 10G Ethernet connections (10G_LAN Port1) for the X9DRT-PT serverboard on the 2027PR-HC0TR server. Additionally an IPMI LAN port is provided above the rear USB connectors. The system's Nuvoton WPCM450R BMC (Baseboard Management Control) chip supports LAN 2.0.

Onboard Controllers/Ports

A Mellonox® InfiniBand connector is located on the 2027PR-HC0FR serverboard. The color-coded I/O ports on all servers include a VGA (monitor) port, two Ethernet ports (one IPMI LAN and one 1G or 10G Ethernet), two USB 2.0 ports (USB 0/1), two onboard USB headers for two front access connections (USB 2/3) and an additional internal USB header (USB 4).

Graphics Controller

The X9DRT-P/PIBF/PT features an integrated Matrox® G200eW Video Controller.

InfiniBand

The X9DRT-PIBF serverboard for the 2027PR-HC0FR server includes an InfiniBand connector. InfiniBand is a scalable serial communications link intended for connecting processors with high-speed peripherals.

Other Features

Other onboard features that promote system health include onboard voltage monitors, a chassis intrusion header, auto-switching voltage regulators, chassis and CPU overheat sensors, virus protection, node manager software and BIOS rescue.

1-3 Server Chassis Features

The following is a general outline of the main features of the SC217 server chassis.

System Power

Each SC217 chassis model includes a high-efficiency 94% or 95+% Platinum certified power supply, rated at 2000 Watts plus one redundant backup power supply. In the unlikely event your power supply fails, replacement is simple and can be accomplished without tools.

Note: The power supplies are both redundant, hot-plug.

SAS Subsystem

The SC217 supports up to twenty-four (24) 2.5" hot-swap SAS drives in trays (6 for each node). These drives are hot-swappable units and are connected to an adapter card that provides power and control.

Note: The operating system you use must have RAID support to enable the hot-swap capability of the drives.

Front Control Panel

SC217 models include four front panels on the handles of the chassis which control each of the systems. Each control panel on the 2027PR-HC0R-HC0TR-HC0FR server provides you with system monitoring and control for one server node. LEDs indicate system power, HDD activity, network activity, system overheat and power supply failure. A main power button and a system reset button are also included.

I/O Ports

The SC217 chassis designed to be used in a 2U rackmount configuration. The SC217 chassis provides a low-profile add-on card slot, a VGA port, two USB 2.0 ports, two gigabit or 10-gigabit Ethernet ports, an IPMI Ethernet port and an InfiniBand® port per node.

Cooling System

The SC217 chassis accepts four system fans, which are powered from the backplane.

Note: The fans in this system are NOT redundant, hot-plug.

Air Shrouds

The SC217 chassis includes four mylar air shrouds that direct the airflow where cooling is needed on each serverboard. Always use the air shroud included with your chassis on each serverboard.

Mounting Rails

The SC217 includes a set of quick-release rails, and can be placed in a rack for secure storage and use. To setup your rack, follow the step-by-step instructions included in this manual.

1-4 Advanced Power Management

Intel® Intelligent Power Node Manager (IPNM)

The Intel® Intelligent Power Node Manager (IPNM) provides your system with real-time thermal control and power management for maximum energy efficiency. Although IPNM Specification Version 2.0 is supported by the BMC (Baseboard Management Controller), your system must also have IPNM-compatible Manageability Engine (ME) 2.0 firmware installed to use this feature.

Manageability Engine (ME)

The Manageability Engine, which is an ARC controller embedded in the IOH (I/O Hub), provides Server Platform Services (SPS) to your system. The services provided by SPS are different from those proveded by the ME on client platforms.

Figure 1-1. C602 Chipset:
System Block Diagram

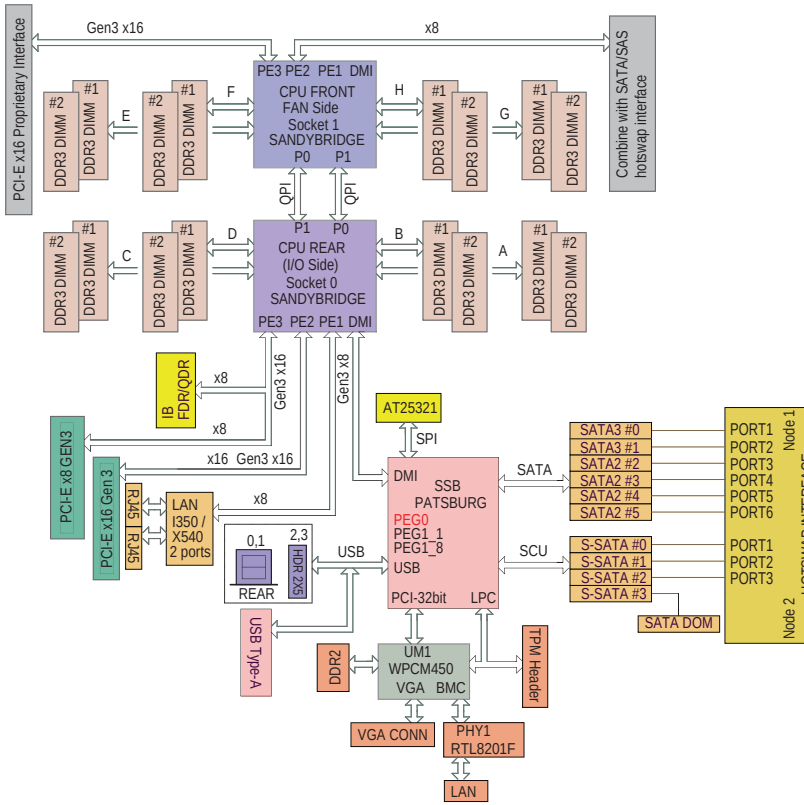

Note: This is a general block diagram. Please see Chapter 5 for details.

1-4 Contacting Supermicro

Headquarters

Address:	Super Micro Computer, Inc.
	980 Rock Ave.
	San Jose, CA 95131 U.S.A.
Tel:	+1 (408) 503-8000
Fax:	+1 (408) 503-8008
Email:	marketing@supermicro.com (General Information)
	support@supermicro.com (Technical Support)
Website:	www.supermicro.com

Europe

Address:	Super Micro Computer B.V.
	Het Sterrenbeeld 28, 5215 ML
	's-Hertogenbosch, The Netherlands
Tel:	+31 (0) 73-6400390
Fax:	+31 (0) 73-6416525
Email:	sales@supermicro.nl (General Information)
	support@supermicro.nl (Technical Support)
	rma@supermicro.nl (Customer Support)
Website:	www.supermicro.com

Asia-Pacific

Address:	Super Micro Computer, Inc.
	3F, No. 150, Jian 1st Rd.
	Zhonghe Dist., New Taipei City 235
	Taiwan (R.O.C)
Tel:	+886-(2) 8226-3990
Fax:	+886-(2) 8226-3992
Email:	support@supermicro.com.tw
Website:	www.supermicro.com.tw

1-5 2U Twin^2: System Notes

As a 2U Twin^2 configuration, the 2027PR-HC0R-HC0TR-HC0FR is a unique server system. With four system boards incorporated into a single chassis acting as four separate nodes, there are several points you should keep in mind.

Nodes

Each of the four serverboards act as a separate node in the system. As independent nodes, each may be powered off and on without affecting the others. In addition, each node is a hot-swappable unit that may be removed from the rear of the chassis. The nodes are connected to the server backplane by means of an adapter card.

Note: A guide pin is located between the upper and lower nodes on the inner chassis wall. This guide pin also acts as a “stop” when a node is fully installed. If too much force is used when inserting a node this pin may break off. Take care to slowly slide a node in until you hear the “click” of the locking tab seating itself.

System Power

Dual 2000 Watt power supply is used to provide the power for all four serverboards. Each serverboard however, can be shut down independently of the other with the power button on its own control panel.

SAS/SATA Backplane

As a system, the 2027PR-HC0R-HC0TR-HC0FR supports the use of twenty-four (24) SAS/SATA drives (six per serverboard). A single SAS adapter card works to apply system-based control for logically connecting a set of six SAS drives to each serverboard. Consequently, RAID setup is limited to a six-drive scheme (RAID cannot be spread across all twenty-four drives). See the Drive Bay Installation/ Removal section in Chapter 6 for the logical hard drive and node configuration.

Chapter 2

Server Installation

2-1 Overview

This chapter provides a quick setup checklist to get your SuperServer 2027PR-HC0R-HC0TR-HC0FR up and running. Following these steps in the order given should enable you to have the system operational within a minimum amount of time. This quick setup assumes that your system has come to you with the processors and memory preinstalled. If your system is not already fully integrated with a serverboard, processors, system memory etc., please turn to the chapter or section noted in each step for details on installing specific components.

2-2 Unpacking the System

You should inspect the box the 2027PR-HC0R-HC0TR-HC0FR server was shipped in and note if it was damaged in any way. If the server itself shows damage you should file a damage claim with the carrier who delivered it.

Decide on a suitable location for the rack unit that will hold the 2027PR-HC0R-HC0TR-HC0FR server. It should be situated in a clean, dust-free area that is well ventilated. Avoid areas where heat, electrical noise and electromagnetic fields are generated. You will also need it placed near a grounded power outlet. Read the Rack and Server Precautions in the next section.

2-3 Preparing for Setup

The box the SuperServer 2027PR-HC0R-HC0TR-HC0FR was shipped in should include two sets of rail assemblies, two rail mounting brackets and the mounting screws you will need to install the system into the rack. Follow the steps in the order given to complete the installation process in a minimum amount of time. Please read this section in its entirety before you begin the installation procedure outlined in the sections that follow.

Choosing a Setup Location

- Leave enough clearance in front of the rack to enable you to open the front door completely (~25 inches) and approximately 30 inches of clearance in the back of the rack to allow for sufficient airflow and ease in servicing.
- This product is for installation only in a Restricted Access Location (dedicated equipment rooms, service closets and the like).
- This product is not suitable for use with visual display work place devices acccording to §2 of the the German Ordinance for Work with Visual Display Units.

2-4 Warnings and Precautions

Rack Precautions

- Ensure that the leveling jacks on the bottom of the rack are fully extended to the floor with the full weight of the rack resting on them.
- In single rack installation, stabilizers should be attached to the rack. In multiple rack installations, the racks should be coupled together.
- Always make sure the rack is stable before extending a component from the rack.
- You should extend only one component at a time - extending two or more simultaneously may cause the rack to become unstable.

Server Precautions

- Review the electrical and general safety precautions in Chapter 4.
- Determine the placement of each component in the rack *before* you install the rails.
- Install the heaviest server components on the bottom of the rack first, and then work up.
- Use a regulating uninterruptible power supply (UPS) to protect the server from power surges, voltage spikes and to keep your system operating in case of a power failure.
- Allow any hot plug drives and power supply modules to cool before touching them.
- Always keep the rack's front door and all panels and components on the servers closed when not servicing to maintain proper cooling.

Rack Mounting Considerations

Warning! To prevent bodily injury when mounting or servicing this unit in a rack, you must take special precautions to ensure that the system remains stable. The following guidelines are provided to ensure your safety:

- This unit should be mounted at the bottom of the rack if it is the only unit in the rack.
- When mounting this unit in a partially filled rack, load the rack from the bottom to the top with the heaviest component at the bottom of the rack.
- If the rack is provided with stabilizing devices, install the stabilizers before mounting or servicing the unit in the rack.

Ambient Operating Temperature

If installed in a closed or multi-unit rack assembly, the ambient operating temperature of the rack environment may be greater than the ambient temperature of the room. Therefore, consideration should be given to installing the equipment in an environment compatible with the manufacturer's maximum rated ambient temperature (Tmra).

Reduced Airflow

Equipment should be mounted into a rack so that the amount of airflow required for safe operation is not compromised.

Mechanical Loading

Equipment should be mounted into a rack so that a hazardous condition does not arise due to uneven mechanical loading.

Circuit Overloading

Consideration should be given to the connection of the equipment to the power supply circuitry and the effect that any possible overloading of circuits might have on overcurrent protection and power supply wiring. Appropriate consideration of equipment nameplate ratings should be used when addressing this concern.

Reliable Ground

A reliable ground must be maintained at all times. To ensure this, the rack itself should be grounded. Particular attention should be given to power supply connections other than the direct connections to the branch circuit (i.e. the use of power strips, etc.).

2-5 Installing the System into a Rack

This section provides information on installing the 2027PR-HC0R-HC0TR-HC0FR into a rack unit with the rails provided. There are a variety of rack units on the market, which may mean that the assembly procedure will differ slightly from the instructions provided. You should also refer to the installation instructions that came with the rack unit you are using. **NOTE:** This rail will fit a rack between 26.5" and 36.4" deep.

Warning: Do not pick up the server with the front handles. They are designed to pull the system from a rack only.

Stability Hazard: The rack stabilizing mechanism must be in place, or the rack must be bolted to the floor before you slide the unit out for servicing. Failure to stabilize the rack can cause the rack to tip over.

Identifying the Sections of the Rack Rails

The chassis package includes two rail assemblies in the rack mounting kit. Each assembly consists of three sections: An inner chassis rail which secures directly to the chassis, an outer rail that secures to the rack, and a middle rail which extends from the outer rail (see Figure 2-1). These assemblies are specifically designed for the left and right side of the chassis.

Figure 2-1. Identifying the Outer Rail, Middle Rail and Inner Rails (Left Rail Assembly Shown)

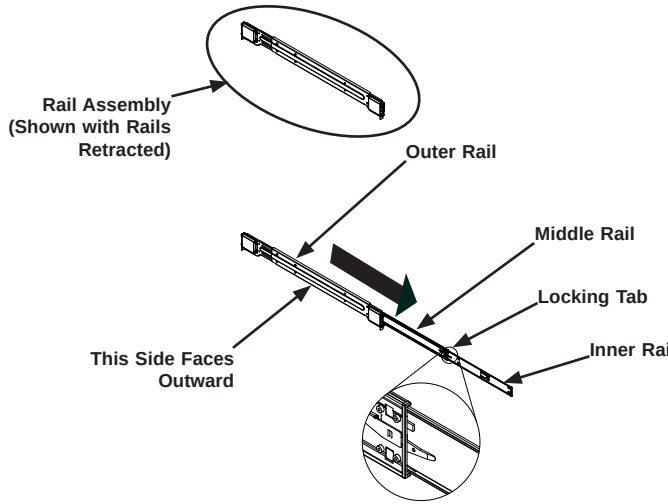

Locking Tabs

Each inner rail has a locking tab. This tab locks the chassis into place when installed and pushed fully into the rack. These tabs also lock the chassis in place when fully extended from the rack. This prevents the server from coming completely out of the rack when when the chassis is pulled out for servicing.

Releasing the Inner Rail

Use the procedure below to release the inner rails from the outer rails.

Releasing Inner Rail from the Outer Rails (Figure 2-2)

1. Identify the left and right outer rail assemblies as described in section 2-5.
2. Pull the inner rail out of the outer rail until it is fully extended as illustrated below.
3. Press the locking tab down to release the inner rail.
4. Pull the inner rail all the way out.
5. Repeat steps 1-3 for the second outer rail.

Figure 2-2. Extending and Releasing the Inner Rail

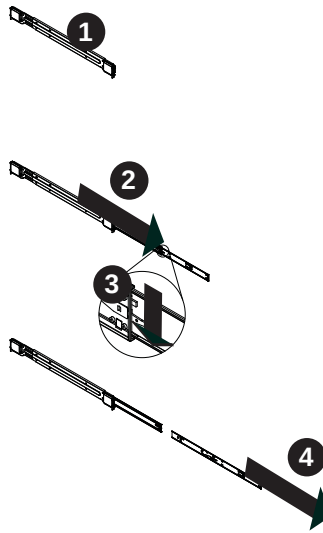

Installing The Inner Rails on the Chassis

To install the inner rails, use the procedure below.

Installing the Inner Rails (Figures 2-3 and 2-4)

1. Confirm that the left and right inner rails have been correctly identified.
2. Place the inner rail firmly against the side of the chassis, aligning the hooks on the side of the chassis with the holes in the inner rail.
3. Slide the inner rail forward toward the front of the chassis until the rail clicks into the locked position, which secures the inner rail to the chassis.
4. Secure the inner rail to the chassis with the screws provided.
5. Repeat steps 1 through 4 above for the other inner rail.

Figure 2-3. Installing the Inner Rails

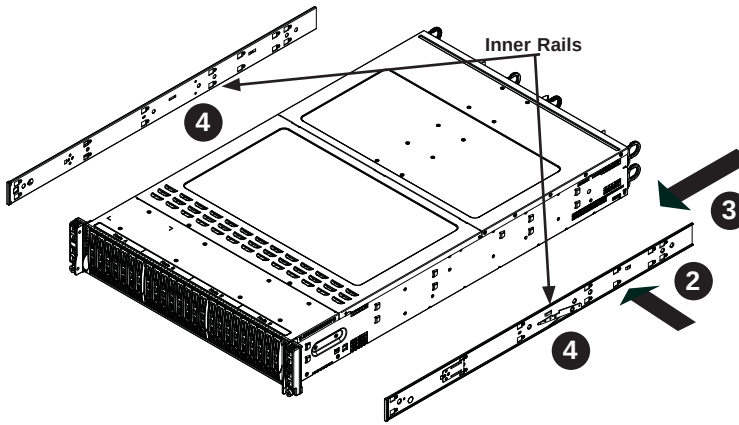

Figure 2-4. Inner Rails Installed on the Chassis

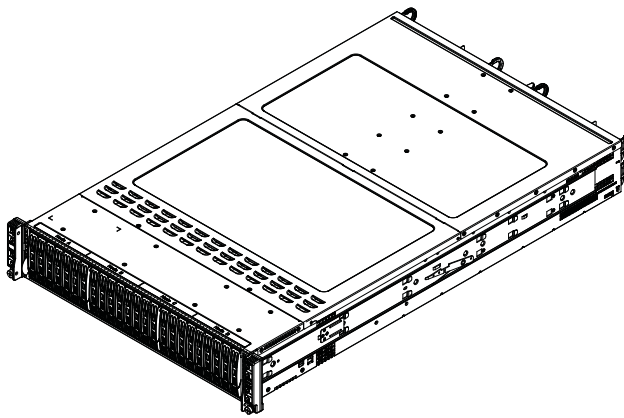

Installing the Outer Rails on the Rack

Use the procedure below to install the outer rails onto the rack.

Installing the Outer Rails (Figure 2-5)

1. Press upward on the locking tab at the rear end of the middle rail.
2. Push the middle rail back into the outer rail.
3. Hang the hooks of the front of the outer rail onto the slots on the front of the rack. If necessary, use screws to secure the outer rails to the rack, as illustrated above.
4. Pull out the rear of the outer rail, adjusting the length until it fits within the posts of the rack.
5. Hang the hooks of the rear portion of the outer rail onto the slots on the rear of the rack. If necessary, use screws to secure the rear of the outer rail to the rear of the rack.
6. Repeat steps 1-5 for the remaining outer rail.

Figure 2-5. Extending and Releasing the Outer Rails

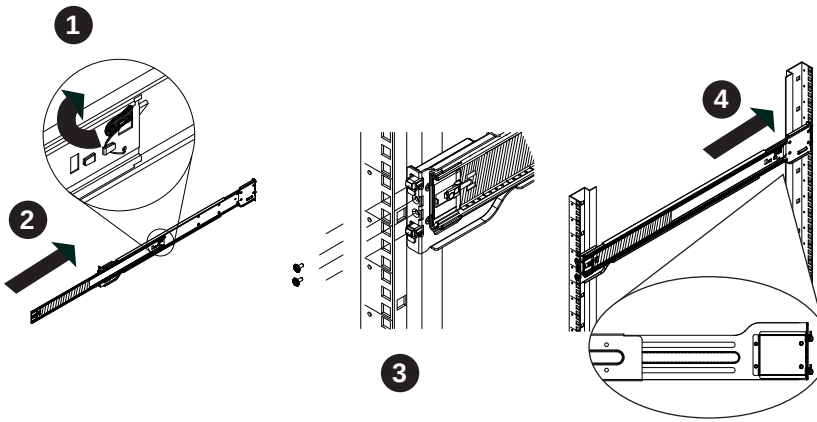

Standard Chassis Installation

Installing the Chassis into a Rack (Figure 2-6)

1. Confirm that the inner rails are properly installed on the chassis.
2. Confirm that the outer rails are correctly installed on the rack.
3. Pull the middle rail out from the front of the outer rail and make sure that the ball-bearing shuttle is at the front locking position of the middle rail.
4. Align the chassis inner rails with the front of the middle rails.
5. Slide the inner rails on the chassis into the middle rails, keeping the pressure even on both sides, until the locking tab of the inner rail clicks into the front of the middle rail, locking the chassis into the fully extended position.
6. Depress the locking tabs of both sides at the same time and push the chassis all the way into the rear of the rack.
7. If necessary for security purposes, use screws to secure the chassis handles to the front of the rack.

Note: The figure below is for illustration purposes only. Always install servers to the bottom of the rack first.

Figure 2-6. Installing into a Rack

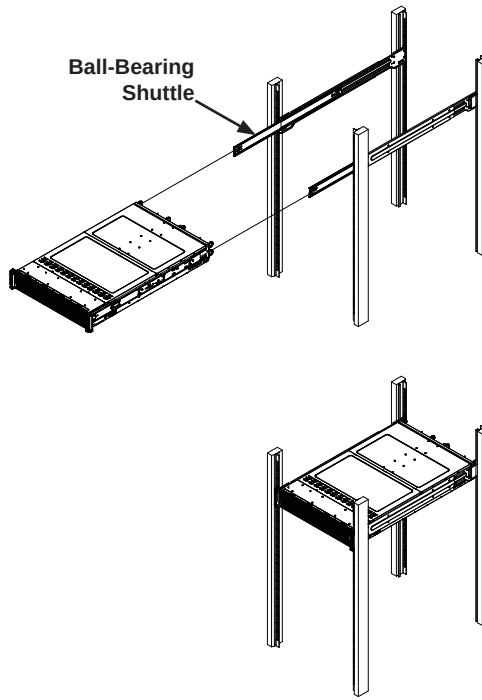

2-6 Checking the Serverboard Setup

After you install the 2027PR-HC0R-HC0TR-HC0FR server in the rack, you will need to open the unit to make sure the serverboard is properly installed and all the connections have been made.

Before operating the SC217 chassis for the first time, it is important to remove the protective film covering the top of the chassis, in order to allow for proper ventilation and cooling.

Removing the Chassis Cover and Protective Film (Figure 2-7)

1. Uplug the AC power cord from any external power source.
2. Remove the two screws which secure the top cover onto the chassis as shown above.
3. Lift the top cover up and off the chassis.
4. Peel off the protective film covering the top cover and the top of the chassis
5. Check that all ventilation openings on the top cover and the top of the chassis are clear and unobstructed.
6. Replace the chassis cover and reconnect the AC power cord.

Caution: Except for short periods of time, do NOT operate the server without the cover in place. The chassis cover must be in place to allow proper airflow and prevent overheating.

Figure 2-7. Accessing the Inside of the System

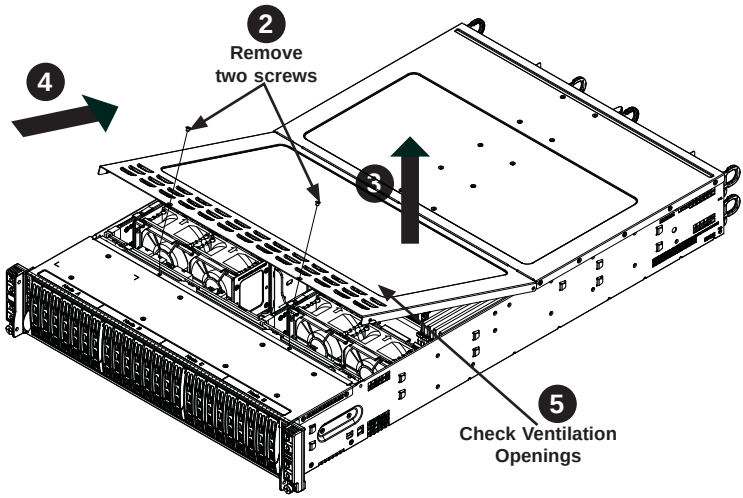

Checking the Components and Setup

1. You may have one or two processors already installed into the serverboard. Each processor needs its own heat sink. See Chapter 5 for instructions on processor and heat sink installation.
2. Your 2027PR-HC0R-HC0TR-HC0FR server system may have come with system memory already installed. Make sure all DIMMs are fully seated in their slots. For details on adding system memory, refer to Chapter 5.
3. If desired, you can install add-on cards to the system. See Chapter 5 for details on installing PCI add-on cards.
4. Make sure all power and data cables are properly connected and not blocking the chassis airflow. Also make sure that no cables are positioned in front of the fans. See Chapter 5 for details on cable connections.

2-7 Checking the Drive Bay Setup

Next, you should check to make sure the peripheral drives and the SATA drives have been properly installed and all connections have been made.

Checking the Drives

1. All drives are accessable from the front of the server. A hard drive can be installed and removed from the front of the chassis without removing the top chassis cover.
2. Depending upon your system's configuration, your system may have one or more drives already installed. If you need to install hard drives, please refer to Chapter 6.

Checking the Airflow

1. Make sure there are no objects obstructing the airflow in and out of the chassis. In addition, if you are using a front bezel, make sure the bezel's filter is replaced periodically.
2. Except for brief periods while swapping hard drives, do not operate the server without drives or the drive carriers in the drive bays. Use only recommended server parts.
3. Make sure no wires or foreign objects obstruct airflow through the chassis. Pull all excess cabling out of the airflow path or use shorter cables.
4. The control panel LEDs inform you of system status. See “Chapter 3: System Interface” for details on the LEDs and the control panel buttons.

Providing Power

1. Plug the power cord(s) from the power supply unit(s) into a high-quality power strip that offers protection from electrical noise and power surges. It is recommended that you use an uninterruptible power supply (UPS).
2. Depress the power on button on the front of the chassis.

Chapter 3

System Interface

3-1 Overview

There are several LEDs on the control panel and on the drive carriers to keep you constantly informed of the overall status of the system. SC217 models include four front panels on the handles of the chassis which control each of the systems.

This chapter explains the meanings of all LED indicators and the appropriate response you may need to take.

Figure 3-1. Control Panel

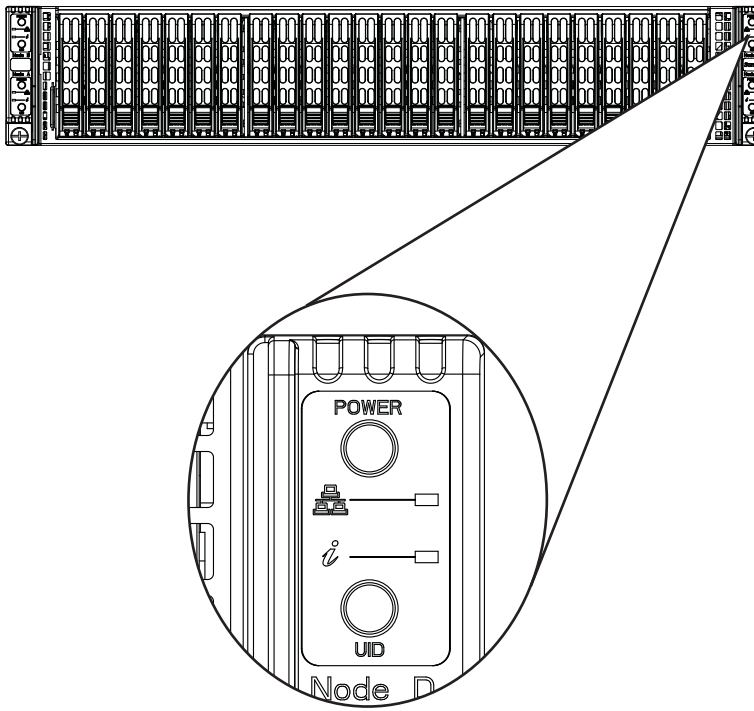

3-2 Control Panel Buttons

Power

The main power button on each of the control panels is used to apply or remove power from the power supply to associated node Turning power to the system off with this button removes the main power, but keeps standby power supplied to the system. The power button has a built-in LED which will turn green when the power is on.

UID

When used with a UID compatible serverboard, the UID button is used to turn on or off the blue light function of the LED. This light is displayed in the front as part of the UID button and with a separate LED at the rear of the node. The light helps locate the node in large racks and server banks.

3-3 Control Panel LEDs

Each control panel has two LEDs that provide critical information about parts of the system.

NIC

Indicates network activity on either LAN1 or LAN2 when flashing.

Information LED

See the following table for the status shown by this LED.

Information LED	
Status	**Description**
Continously on and red	An overheat ocondition has occured. (This may be caused by cable congestion.)
Blinking red (1 Hz)	Fan failure: check for an inoperative fan.
Blinking red (0.25 Hz)	Power failure: check for an inoperative power supply.
Solid blue	Local UID has been activated. Use this function to locate the server in a rack environment.
Blinking blue (300 msec)	Remote UID has been activated. Use this function to locate the server from a remote location.

3-4 Drive Carrier LEDs

The SC217 chassis uses SATA drives.

SATA Drives

Each SATA drive carrier has two LEDs.

- Blue: Each Serial ATA drive carrier has a blue LED. When illuminated, this blue LED (on the front of the SATA drive carrier) indicates drive activity. A connection to the SATA backplane enables this LED to blink on and off when that particular drive is being accessed.
- Red: The red LED to indicate an SATA drive failure. If one of the SATA drives fail, you should be notified by your system management software.

SCSI Drives

This chassis does not support SCSI drives at this time.

Notes

Chapter 4

Standardized Warning Statements for AC Systems

4-1 About Standardized Warning Statements

The following statements are industry standard warnings, provided to warn the user of situations which have the potential for bodily injury. Should you have questions or experience difficulty, contact Supermicro's Technical Support department for assistance. Only certified technicians should attempt to install or configure components.

Read this appendix in its entirety before installing or configuring components in the Supermicro chassis.

These warnings may also be found on our web site at http://www.supermicro.com/about/policies/safety_information.cfm.

Warning Definition

Warning!

This warning symbol means danger. You are in a situation that could cause bodily injury. Before you work on any equipment, be aware of the hazards involved with electrical circuitry and be familiar with standard practices for preventing accidents.

警告の定義

この警告サインは危険を意味します。

人身事故につながる可能性がありますので、いずれの機器でも動作させる前に、

電気回路に含まれる危険性に注意して、標準的な事故防止策に精通して下さい。

此警告符号代表危险。

您正处于可能受到严重伤害的工作环境中。在您使用设备开始工作之前，必须充分意识到触电的危险，并熟练掌握防止事故发生的标准工作程序。请根据每项警告结尾的声明号码找到此设备的安全性警告说明的翻译文本。

此警告符號代表危險。

您正處於可能身體可能會受損傷的工作環境中。在您使用任何設備之前，請注意觸電的危險，並且要熟悉預防事故發生的標準工作程序。請依照每一注意事項後的號碼找到相關的翻譯說明內容。

Warnung

WICHTIGE SICHERHEITSHINWEISE

Dieses Warnsymbol bedeutet Gefahr. Sie befinden sich in einer Situation, die zu Verletzungen führen kann. Machen Sie sich vor der Arbeit mit Geräten mit den Gefahren elektrischer Schaltungen und den üblichen Verfahren zur Vorbeugung vor Unfällen vertraut. Suchen Sie mit der am Ende jeder Warnung angegebenen Anweisungsnummer nach der jeweiligen Übersetzung in den übersetzten Sicherheitshinweisen, die zusammen mit diesem Gerät ausgeliefert wurden.

BEWAHREN SIE DIESE HINWEISE GUT AUF.

INSTRUCCIONES IMPORTANTES DE SEGURIDAD

Este símbolo de aviso indica peligro. Existe riesgo para su integridad física. Antes de manipular cualquier equipo, considere los riesgos de la corriente eléctrica y familiarícese con los procedimientos estándar de prevención de accidentes. Al final de cada advertencia encontrará el número que le ayudará a encontrar el texto traducido en el apartado de traducciones que acompaña a este dispositivo.

GUARDE ESTAS INSTRUCCIONES.

IMPORTANTES INFORMATIONS DE SÉCURITÉ

Ce symbole d'avertissement indique un danger. Vous vous trouvez dans une situation pouvant entraîner des blessures ou des dommages corporels. Avant de travailler sur un équipement, soyez conscient des dangers liés aux circuits électriques et familiarisez-vous avec les procédures couramment utilisées pour éviter les accidents. Pour prendre connaissance des traductions des avertissements figurant dans les consignes de sécurité traduites qui accompagnent cet appareil, référez-vous au numéro de l'instruction situé à la fin de chaque avertissement.

CONSERVEZ CES INFORMATIONS.

תקנון הצהרות אזהרה

הצהרות הבאות הן אזהרות על פי תקני התעשייה, על מנת להזהיר את המשתמש מפני חבלה פיזית אפשרית. במידה ויש שאלות או היתקלות בבעיה כלשהי, יש ליצור קשר עם מחלקת תמיכה טכנית של סופרמיקרו. טכנאים מוסמכים בלבד רשאים להתקין או להגדיר את הרכיבים.

יש לקרוא את הנספח במלואו לפני התקנת או הגדרת הרכיבים במארזי סופרמיקרו.

تحذير! هذا الرمز يعني خطر انك في حالة يمكن أن تتسبب في اصابة جسدية .
قبل أن تعمل على أي معدات،كن على علم بالمخاطر الناجمة عن الدوائر الكهربائية
وكن على دراية بالممارسات الوقائية لمنع وقوع أي حوادث
استخدم رقم البيان المنصوص في نهاية كل تحذير للعثور ترجمتها

안전을 위한 주의사항

경고!

이 경고 기호는 위험이 있음을 알려 줍니다. 작업자의 신체에 부상을 야기 할 수 있는 상태에 있게 됩니다. 모든 장비에 대한 작업을 수행하기 전에 전기회로와 관련된 위험요소들을 확인하시고 사전에 사고를 방지할 수 있도록 표준 작업절차를 준수해 주시기 바랍니다.

해당 번역문을 찾기 위해 각 경고의 마지막 부분에 제공된 경고문 번호를 참조하십시오

BELANGRIJKE VEILIGHEIDSINSTRUCTIES

Dit waarschuwings symbool betekent gevaar. U verkeert in een situatie die lichamelijk letsel kan veroorzaken. Voordat u aan enige apparatuur gaat werken, dient u zich bewust te zijn van de bij een elektrische installatie betrokken risico's en dient u op de hoogte te zijn van de standaard procedures om ongelukken te voorkomen. Gebruik de nummers aan het eind van elke waarschuwing om deze te herleiden naar de desbetreffende locatie.

BEWAAR DEZE INSTRUCTIES

Installation Instructions

Warning!

Read the installation instructions before connecting the system to the power source.

設置手順書

システムを電源に接続する前に、設置手順書をお読み下さい。

警告

将此系统连接电源前,请先阅读安装说明。

警告

將系統與電源連接前，請先閱讀安裝說明。

Warnung

Vor dem Anschließen des Systems an die Stromquelle die Installationsanweisungen lesen.

¡Advertencia!

Lea las instrucciones de instalación antes de conectar el sistema a la red de alimentación.

Attention

Avant de brancher le système sur la source d'alimentation, consulter les directives d'installation.

יש לקרוא את הוראות התקנה לפני חיבור המערכת למקור מתח.

اقر إرشادات التركيب قبل توصيل النظام إلى مصدر للطاقة

시스템을 전원에 연결하기 전에 설치 안내를 읽어주십시오.

Waarschuwing

Raadpleeg de installatie-instructies voordat u het systeem op de voedingsbron aansluit.

Circuit Breaker

Warning!

This product relies on the building's installation for short-circuit (overcurrent) protection. Ensure that the protective device is rated not greater than: 250 V, 20 A.

サーキット・ブレーカー

この製品は、短絡（過電流）保護装置がある建物での設置を前提としています。

保護装置の定格が250 V、20 Aを超えないことを確認下さい。

警告

此产品的短路(过载电流)保护由建筑物的供电系统提供,确保短路保护设备的额定电流不大于250V,20A。

警告

此產品的短路(過載電流)保護由建築物的供電系統提供,確保短路保護設備的額定電流不大於250V,20A。

Warnung

Dieses Produkt ist darauf angewiesen, dass im Gebäude ein Kurzschluss- bzw. Überstromschutz installiert ist. Stellen Sie sicher, dass der Nennwert der Schutzvorrichtung nicht mehr als: 250 V, 20 A beträgt.

¡Advertencia!

Este equipo utiliza el sistema de protección contra cortocircuitos (o sobrecorrientes) del edificio. Asegúrese de que el dispositivo de protección no sea superior a: 250 V, 20 A.

Attention

Pour ce qui est de la protection contre les courts-circuits (surtension), ce produit dépend de l'installation électrique du local. Vérifiez que le courant nominal du dispositif de protection n'est pas supérieur à :250 V, 20 A.

מוצר זה מסתמך על הגנה המותקנת במבנים למניעת קצר חשמלי. יש לוודא כי
המכשיר המגן מפני הקצר החשמלי הוא לא יותר מ-250 V, 20 A

هذا المنتج يعتمد على معدات الحماية من الدوائرالقصيرة التي تم تثبيتها في المبنى
تأكد من أن تقييم الجهاز الوقائي ليس أكثر من: 20A, 250V

경고!

이 제품은 전원의 단락(과전류)방지에 대해서 전적으로 건물의 관련 설비에 의존합니다. 보호장치의 정격이 반드시 250V(볼트), 20A(암페어)를 초과하지 않도록 해야 합니다.

Waarschuwing

Dit product is afhankelijk van de kortsluitbeveiliging (overspanning) van uw electrische installatie. Controleer of het beveiligde aparaat niet groter gedimensioneerd is dan 220V, 20A.

Power Disconnection Warning

Warning!

The system must be disconnected from all sources of power and the power cord removed from the power supply module(s) before accessing the chassis interior to install or remove system components.

電源切断の警告

システムコンポーネントの取り付けまたは取り外しのために、シャーシー内部にアクセスするには、

システムの電源はすべてのソースから切断され、電源コードは電源モジュールから取り外す必要があります。

警告

在你打开机箱并安装或移除内部器件前,必须将系统完全断电,并移除电源线。

警告

在您打開機殼安裝或移除內部元件前，必須將系統完全斷電，並移除電源線。

Warnung

Das System muss von allen Quellen der Energie und vom Netzanschlusskabel getrennt sein, das von den Spg.Versorgungsteilmodulen entfernt wird, bevor es auf den Chassisinnenraum zurückgreift, um Systemsbestandteile anzubringen oder zu entfernen.

¡Advertencia!

El sistema debe ser disconnected de todas las fuentes de energía y del cable eléctrico quitado de los módulos de fuente de alimentación antes de tener acceso el interior del chasis para instalar o para quitar componentes de sistema.

Attention

Le système doit être débranché de toutes les sources de puissance ainsi que de son cordon d'alimentation secteur avant d'accéder à l'intérieur du chassis pour installer ou enlever des composants de systéme.

אזהרה מפני ניתוק חשמלי

אזהרה !
יש לנתק את המערכת מכל מקורות החשמל ויש להסיר את כבל החשמלי מהספק לפני גישה לחלק הפנימי של המארז לצורך התקנת או הסרת רכיבים.

يجب فصل النظام من جميع مصادر الطاقة وإزالة سلك الكهرباء من وحدة امداد الطاقة قبل
الوصول إلى المناطق الداخلية للهيكل لتثبيت أو إزالة مكونات الجهاز

경고!

시스템에 부품들을 장착하거나 제거하기 위해서는 섀시 내부에 접근하기 전에 반드시 전원 공급장치로부터 연결되어있는 모든 전원과 전기코드를 분리해주어야 합니다.

Waarschuwing

Voordat u toegang neemt tot het binnenwerk van de behuizing voor het installeren of verwijderen van systeem onderdelen, dient u alle spanningsbronnen en alle stroomkabels aangesloten op de voeding(en) van de behuizing te verwijderen

Equipment Installation

Warning!

Only trained and qualified personnel should be allowed to install, replace, or service this equipment.

機器の設置

トレーニングを受け認定された人だけがこの装置の設置、交換、またはサービスを許可されています。

警告

只有经过培训且具有资格的人员才能进行此设备的安装、更换和维修。

警告

只有經過受訓且具資格人員才可安裝、更換與維修此設備。

Warnung

Das Installieren, Ersetzen oder Bedienen dieser Ausrüstung sollte nur geschultem, qualifiziertem Personal gestattet werden.

¡Advertencia!

Solamente el personal calificado debe instalar, reemplazar o utilizar este equipo.

Attention

Il est vivement recommandé de confier l'installation, le remplacement et la maintenance de ces équipements à des personnels qualifiés et expérimentés.

אזהרה !

צוות מוסמך בלבד רשאי להתקין, להחליף את הציוד או לתת שירות עבור הציוד.

يجب أن يسمح فقط للموظفين المؤهلين والمدربين لتركيب واستبدال أو خدمة هذا الجهاز

경고!

훈련을 받고 공인된 기술자만이 이 장비의 설치, 교체 또는 서비스를 수행할 수 있습니다.

Waarschuwing

Deze apparatuur mag alleen worden geïnstalleerd, vervangen of hersteld door geschoold en gekwalificeerd personeel.

Restricted Area

Warning!

This unit is intended for installation in restricted access areas. A restricted access area can be accessed only through the use of a special tool, lock and key, or other means of security. (This warning does not apply to workstations).

アクセス制限区域

このユニットは、アクセス制限区域に設置されることを想定しています。

アクセス制限区域は、特別なツール、鍵と錠前、その他のセキュリティの手段を用いてのみ出入りが可能です。

警告

此部件应安装在限制进出的场所，限制进出的场所指只能通过使用特殊工具、锁和钥匙或其它安全手段进出的场所。

警告

此裝置僅限安裝於進出管制區域，進出管制區域係指僅能以特殊工具、鎖頭及鑰匙或其他安全方式才能進入的區域。

Warnung

Diese Einheit ist zur Installation in Bereichen mit beschränktem Zutritt vorgesehen. Der Zutritt zu derartigen Bereichen ist nur mit einem Spezialwerkzeug, Schloss und Schlüssel oder einer sonstigen Sicherheitsvorkehrung möglich.

¡Advertencia!

Esta unidad ha sido diseñada para instalación en áreas de acceso restringido. Sólo puede obtenerse acceso a una de estas áreas mediante la utilización de una herramienta especial, cerradura con llave u otro medio de seguridad.

Attention

Cet appareil doit être installée dans des zones d'accès réservés. L'accès à une zone d'accès réservé n'est possible qu'en utilisant un outil spécial, un mécanisme de verrouillage et une clé, ou tout autre moyen de sécurité.

אזור עם גישה מוגבלת

אזהרה !
יש להתקין את היחידה באזורים שיש בהם הגבלת גישה. הגישה ניתנת בעזרת כלי אבטחה בלבד (מפתח, מנעול וכד').

تم تخصيص هذه الوحدة لتركيبها في مناطق محظورة .
يمكن الوصول إلى منطقة محظورة فقط من خلال استخدام أداة خاصة،
قفل ومفتاح أو أي وسيلة أخرى للالأمان

경고!

이 장치는 접근이 제한된 구역에 설치하도록 되어있습니다. 특수도구, 잠금 장치 및 키, 또는 기타 보안 수단을 통해서만 접근 제한 구역에 들어갈 수 있습니다.

Waarschuwing

Dit apparaat is bedoeld voor installatie in gebieden met een beperkte toegang. Toegang tot dergelijke gebieden kunnen alleen verkregen worden door gebruik te maken van speciaal gereedschap, slot en sleutel of andere veiligheidsmaatregelen.

Battery Handling

Warning!

There is the danger of explosion if the battery is replaced incorrectly. Replace the battery only with the same or equivalent type recommended by the manufacturer. Dispose of used batteries according to the manufacturer's instructions

電池の取り扱い

電池交換が正しく行われなかった場合、破裂の危険性があります。交換する電池はメーカーが推奨する型、または同等のものを使用下さい。使用済電池は製造元の指示に従って処分して下さい。

警告

电池更换不当会有爆炸危险。请只使用同类电池或制造商推荐的功能相当的电池更换原有电池。请按制造商的说明处理废旧电池。

警告

電池更換不當會有爆炸危險。請使用製造商建議之相同或功能相當的電池更換原有電池。請按照製造商的說明指示處理廢棄舊電池。

Warnung

Bei Einsetzen einer falschen Batterie besteht Explosionsgefahr. Ersetzen Sie die Batterie nur durch den gleichen oder vom Hersteller empfohlenen Batterietyp. Entsorgen Sie die benutzten Batterien nach den Anweisungen des Herstellers.

Attention

Danger d'explosion si la pile n'est pas remplacée correctement. Ne la remplacer que par une pile de type semblable ou équivalent, recommandée par le fabricant. Jeter les piles usagées conformément aux instructions du fabricant.

¡Advertencia!

Existe peligro de explosión si la batería se reemplaza de manera incorrecta. Reemplazar la batería exclusivamente con el mismo tipo o el equivalente recomendado por el fabricante. Desechar las baterías gastadas según las instrucciones del fabricante.

אזהרה !

קיימת סכנת פיצוץ של הסוללה במידה והוחלפה בדרך לא תקינה. יש להחליף את הסוללה בסוג התואם מחברת יצרן מומלצת.

סילוק הסוללות המשומשות יש לבצע לפי הוראות היצרן.

هناك خطر من انفجار في حالة استبدال البطارية بطريقة غير صحيحة فعليك استبدال البطارية
فقط بنفس النوع أو ما يعادلها كما أوصت به الشركة المصنعة
تخلص من البطاريات المستعملة وفقا لتعليمات الشركة الصانعة

경고!

배터리가 올바르게 교체되지 않으면 폭발의 위험이 있습니다. 기존 배터리와 동일하거나 제조사에서 권장하는 동등한 종류의 배터리로만 교체해야 합니다. 제조사의 안내에 따라 사용된 배터리를 처리하여 주십시오.

Waarschuwing

Er is ontploffingsgevaar indien de batterij verkeerd vervangen wordt. Vervang de batterij slechts met hetzelfde of een equivalent type die door de fabrikant aanbevolen wordt. Gebruikte batterijen dienen overeenkomstig fabrieksvoorschriften afgevoerd te worden.

Redundant Power Supplies

Warning!

This unit might have more than one power supply connection. All connections must be removed to de-energize the unit.

冗長電源装置

このユニットは複数の電源装置が接続されている場合があります。

ユニットの電源を切るためには、すべての接続を取り外さなければなりません。

警告

此部件连接的电源可能不止一个，必须将所有电源断开才能停止给该部件供电。

警告

此裝置連接的電源可能不只一個，必須切斷所有電源才能停止對該裝置的供電。

Warnung

Dieses Gerät kann mehr als eine Stromzufuhr haben. Um sicherzustellen, dass der Einheit kein trom zugeführt wird, müssen alle Verbindungen entfernt werden.

¡Advertencia!

Puede que esta unidad tenga más de una conexión para fuentes de alimentación. Para cortar por completo el suministro de energía, deben desconectarse todas las conexiones.

Attention

Cette unité peut avoir plus d'une connexion d'alimentation. Pour supprimer toute tension et tout courant électrique de l'unité, toutes les connexions d'alimentation doivent être débranchées.

אם קיים יותר מספק אחד

אזהרה !

ליחדה יש יותר מחיבור אחד של ספק. יש להסיר את כל החיבורים על מנת לרוקן את היחידה.

قد يكون لهذا الجهاز عدة اتصالات بوحدات امداد الطاقة.
يجب إزالة كافة الاتصالات لعزل الوحدة عن الكهرباء

경고!

이 장치에는 한 개 이상의 전원 공급 단자가 연결되어 있을 수 있습니다. 이 장치에 전원을 차단하기 위해서는 모든 연결 단자를 제거해야만 합니다.

Waarschuwing

Deze eenheid kan meer dan één stroomtoevoeraansluiting bevatten. Alle aansluitingen dienen verwijderd te worden om het apparaat stroomloos te maken.

Backplane Voltage

Warning!

Hazardous voltage or energy is present on the backplane when the system is operating. Use caution when servicing.

バックプレーンの電圧

システムの稼働中は危険な電圧または電力が、バックプレーン上にかかっています。
修理する際には注意ください。

警告

当系统正在进行时，背板上有很危险的电压或能量，进行维修时务必小心。

警告

當系統正在進行時，背板上有危險的電壓或能量，進行維修時務必小心。

Warnung

Wenn das System in Betrieb ist, treten auf der Rückwandplatine gefährliche Spannungen oder Energien auf. Vorsicht bei der Wartung.

¡Advertencia!

Cuando el sistema está en funcionamiento, el voltaje del plano trasero es peligroso. Tenga cuidado cuando lo revise.

Attention

Lorsque le système est en fonctionnement, des tensions électriques circulent sur le fond de panier. Prendre des précautions lors de la maintenance.

מתח בפנל האחורי

אזהרה !
קיימת סכנת מתח בפנל האחורי בזמן תפעול המערכת. יש להיזהר במהלך העבודה.

هناك خطر من التيار الكهربائي أوالطاقة الموجودة على اللوحة عندما يكون النظام يعمل كن حذرا عند خدمة هذا الجهاز

경고!

시스템이 동작 중일 때 후면판 (Backplane)에는 위험한 전압이나 에너지가 발생합니다. 서비스 작업 시 주의하십시오.

Waarschuwing

Een gevaarlijke spanning of energie is aanwezig op de backplane wanneer het systeem in gebruik is. Voorzichtigheid is geboden tijdens het onderhoud.

Comply with Local and National Electrical Codes

Warning!

Installation of the equipment must comply with local and national electrical codes.

地方および国の電気規格に準拠
機器の取り付けはその地方および国の電気規格に準拠する必要があります。

警告

设备安装必须符合本地与本国电气法规。

警告

設備安裝必須符合本地與本國電氣法規。

Warnung

Die Installation der Geräte muss den Sicherheitsstandards entsprechen.

¡Advertencia!

La instalacion del equipo debe cumplir con las normas de electricidad locales y nacionales.Attention

L'équipement doit être installé conformément aux normes électriques nationales et locales.

תיאום חוקי החשמל הארצי

אזהרה !
התקנת הציוד חייבת להיות תואמת לחוקי החשמל המקומיים והארציים.

تركيب المعدات الكهربائية يجب أن يمتثل للقوانين المحلية والوطنية المتعلقة بالكهرباء

경고!

현 지역 및 국가의 전기 규정에 따라 장비를 설치해야 합니다.

Waarschuwing

Bij installatie van de apparatuur moet worden voldaan aan de lokale en nationale elektriciteitsvoorschriften.

Product Disposal

Warning!

Ultimate disposal of this product should be handled according to all national laws and regulations.

製品の廃棄

この製品を廃棄処分する場合、国の関係する全ての法律・条例に従い処理する必要があります。

警告

本产品的废弃处理应根据所有国家的法律和规章进行。

警告

本產品的廢棄處理應根據所有國家的法律和規章進行。

Warnung

Die Entsorgung dieses Produkts sollte gemäß allen Bestimmungen und Gesetzen des Landes erfolgen.

¡Advertencia!

Al deshacerse por completo de este producto debe seguir todas las leyes y reglamentos nacionales.

Attention

La mise au rebut ou le recyclage de ce produit sont généralement soumis à des lois et/ou directives de respect de l'environnement. Renseignez-vous auprès de l'organisme compétent.

סילוק המוצר

אזהרה !
סילוק סופי של מוצר זה חייב להיות בהתאם להנחיות וחוקי המדינה.

عند التخلص النهائي من هذا المنتج ينبغي التعامل معه وفقا لجميع القوانين واللوائح الوطنية

경고!

이 제품은 해당 국가의 관련 법규 및 규정에 따라 폐기되어야 합니다.

Waarschuwing

De uiteindelijke verwijdering van dit product dient te geschieden in overeenstemming met alle nationale wetten en reglementen.

Hot Swap Fan Warning

Warning!

The fans might still be turning when you remove the fan assembly from the chassis. Keep fingers, screwdrivers, and other objects away from the openings in the fan assembly's housing.

ファン・ホットスワップの警告

シャーシから冷却ファン装置を取り外した際、ファンがまだ回転している可能性があります。ファンの開口部に、指、ドライバー、およびその他のものを近づけないで下さい。

警告

当您从机架移除风扇装置，风扇可能仍在转动。小心不要将手指、螺丝起子和其他物品太靠近风扇

警告

當您從機架移除風扇裝置，風扇可能仍在轉動。小心不要將手指、螺絲起子和其他物品太靠近風扇。

Warnung

Die Lüfter drehen sich u. U. noch, wenn die Lüfterbaugruppe aus dem Chassis genommen wird. Halten Sie Finger, Schraubendreher und andere Gegenstände von den Öffnungen des Lüftergehäuses entfernt.

¡Advertencia!

Los ventiladores podran dar vuelta cuando usted quite ell montaje del ventilador del chasis. Mandtenga los dedos, los destornilladores y todos los objetos lejos de las aberturas del ventilador

Attention

Il est possible que les ventilateurs soient toujours en rotation lorsque vous retirerez le bloc ventilateur du châssis. Prenez garde à ce que doigts, tournevis et autres objets soient éloignés du logement du bloc ventilateur.

אזהרה !

כאשר מסירים את חלקי המאוורר מהמארז, יתכן והמאוורר עדיין עובדים. יש להרחיק למרחק בטוח את האצבעות וכלי עבודה שונים מהפתחים בתוך המאוורר

من الممكن أن المراوح لا تزال تدورعند إزالة كتلة المروحة من الهيكل يجب إبقاء الأصابع ومفكات البراغي
وغيرها من الأشياء بعيدا عن الفتحات في كتلة المروحة.

경고!

섀시로부터 팬 조립품을 제거할 때 팬은 여전히 회전하고 있을 수 있습니다. 팬 조립품 외관의 열려있는 부분들로부터 손가락 및 스크류드라이버, 다른 물체들이 가까이 하지 않도록 배치해 주십시오.

Waarschuwing

Het is mogelijk dat de ventilator nog draait tijdens het verwijderen van het ventilatorsamenstel uit het chassis. Houd uw vingers, schroevendraaiers en eventuele andere voorwerpen uit de buurt van de openingen in de ventilatorbehuizing.

Power Cable and AC Adapter

Warning!

When installing the product, use the provided or designated connection cables, power cables and AC adaptors. Using any other cables and adaptors could cause a malfunction or a fire. Electrical Appliance and Material Safety Law prohibits the use of UL or CSA -certified cables (that have UL/CSA shown on the code) for any other electrical devices than products designated by Supermicro only.

電源コードとACアダプター

製品を設置する場合、提供または指定された接続ケーブル、電源コードとACアダプターを使用下さい。他のケーブルやアダプタを使用すると故障や火災の原因になることがあります。電気用品安全法は、ULまたはCSA認定のケーブル(UL/CSEマークがコードに表記)を Supermicroが指定する製品以外に使用することを禁止しています。

警告

安装此产品时,请使用本身提供的或指定的连接线,电源线和电源适配器.使用其它线材或适配器可能会引起故障或火灾。除了Supermicro所指定的产品,电气用品和材料安全法律规定禁止使用未经UL或CSA认证的线材。(线材上会显示UL/CSA符号)。

警告

安裝此產品時,請使用本身提供的或指定的連接線,電源線和電源適配器.使用其它線材或適配器可能會引起故障或火災。除了Supermicro所指定的產品,電氣用品和材料安全法律規定禁止使用未經UL或CSA認證的線材。(線材上會顯示UL/CSA符號)。

Warnung

Bei der Installation des Produkts, die zur Verfügung gestellten oder benannt Anschlusskabel, Stromkabel und Netzteile. Verwendung anderer Kabel und Adapter kann zu einer Fehlfunktion oder ein Brand entstehen. Elektrische Geräte und Material Safety Law verbietet die Verwendung von UL-oder CSA-zertifizierte Kabel, UL oder CSA auf der Code für alle anderen elektrischen Geräte als Produkte von Supermicro nur bezeichnet gezeigt haben.

¡Advertencia!

Al instalar el producto, utilice los cables de conexión previstos o designados, los cables y adaptadores de CA. La utilización de otros cables y adaptadores podría ocasionar un mal funcionamiento o un incendio. Aparatos Eléctricos y la Ley de Seguridad del Material prohíbe el uso de UL o CSA cables certificados que tienen UL o CSA se muestra en el código de otros dispositivos eléctricos que los productos designados por Supermicro solamente.

Attention

Lors de l'installation du produit, utilisez les bables de connection fournis ou désigné. L'utilisation d'autres cables et adaptateurs peut provoquer un dysfonctionnement ou un incendie. Appareils électroménagers et de loi sur la sécurité Matériel interdit l'utilisation de UL ou CSA câbles certifiés qui ont UL ou CSA indiqué sur le code pour tous les autres appareils électriques que les produits désignés par Supermicro seulement.

חשמליים ומתאמי AC

אזהרה !

כאשר מתקינים את המוצר, יש להשתמש בכבלים, ספקים ומתאמים AC אשר נועדו וסופקו לשם כך. שימוש בכל כבל או מתאם אחר יכול לגרום לתקלה או קצר חשמלי. על פי חוקי שימוש במכשירי חשמל וחוקי בטיחות, קיים איסור להשתמש בכבלים המוסמכים ב- UL או ב- CSA (כשאר מופיע עליהם קוד של UL/CSA) עבור כל מוצר חשמלי אחר שלא צוין על ידי סופרקמיקרו בלבד.

عند تركيب الجهاز يجب استخدام كابلات التوصيل،والكابلات الكهربائية ومحولات التيار المتردد
التي . أن استخدام أي كابلات ومحولات أخرى يتسبب في حدوث عطل أو حريق.
تم توفيرها لك مع المنتج
الأجهزة الكهربائية ومواد قانون السلامة يحظر استخدام الكابلات CSA أو UL معتمدة من قبل
لأي أجهزة كهربائية أخرى غير المنتجات المعينة من قبل Supermicro
(التي تحمل علامة UL/CSA)

경고!

제품을 설치할 때에는 제공되거나 지정된 연결케이블과 전원케이블, AC어댑터를 사용해야 합니다. 그 밖의 다른 케이블들이나 어댑터들은 고장 또는 화재의 원인이 될 수 있습니다. 전기용품안전법 (Electrical Appliance and Material Safety Law)은 슈퍼마이크로에서 지정한 제품들 외에는 그 밖의 다른 전기 장치들을 위한 UL또는 CSA에서 인증한 케이블(전선 위에 UL/CSA가 표시)들의 사용을 금지합니다.

Waarschuwing

Bij het installeren van het product, gebruik de meegeleverde of aangewezen kabels, stroomkabels en adapters. Het gebruik van andere kabels en adapters kan leiden tot een storing of een brand. Elektrisch apparaat en veiligheidsinformatiebladen wet verbiedt het gebruik van UL of CSA gecertificeerde kabels die UL of CSA die op de code voor andere elektrische apparaten dan de producten die door Supermicro alleen.

Chapter 5

Advanced Serverboard Setup

This chapter covers the steps required to install the X9DRT-P/PIBF/PT serverboard into the chassis, connect the data and power cables and install add-on cards. All serverboard jumpers and connections are also described. A layout and quick reference chart are included in this chapter for your reference. Remember to completely close the chassis when you have finished working with the serverboard to better cool and protect the system.

5-1 Handling the Serverboard

Electrostatic Discharge (ESD) can damage electronic components. To prevent damage to any printed circuit boards (PCBs), it is important to handle them very carefully (see previous chapter). To prevent the serverboard from bending, keep one hand under the center of the board to support it when handling. The following measures are generally sufficient to protect your equipment from electric static discharge.

Precautions

- Use a grounded wrist strap designed to prevent Electrostatic Discharge (ESD).
- Touch a grounded metal object before removing any board from its antistatic bag.
- Handle a board by its edges only; do not touch its components, peripheral chips, memory modules or gold contacts.
- When handling chips or modules, avoid touching their pins.
- Put the serverboard, add-on cards and peripherals back into their antistatic bags when not in use.
- For grounding purposes, make sure your computer chassis provides excellent conductivity between the power supply, the case, the mounting fasteners and the serverboard.

Unpacking

The serverboard is shipped in antistatic packaging to avoid electrical static discharge. When unpacking the board, make sure the person handling it is static protected.

5-2 Connecting Cables

Now that the processors are installed, the next step is to connect the cables to the serverboard.

Connecting Data Cables

The cables used to transfer data from the peripheral devices have been carefully routed in preconfigured systems to prevent them from blocking the flow of cooling air that moves through the system from front to back. If you need to disconnect any of these cables, you should take care to reroute them as they were originally after reconnecting them (make sure the red wires connect to the pin 1 locations). If you are configuring the system, keep the airflow in mind when routing the cables.

5-3 Rear I/O Ports

The rear I/O ports in conformance with the PC 99 specification. See Figure 5-1 below for the locations of the various I/O ports.

Figure 5-1. Rear I/O Ports

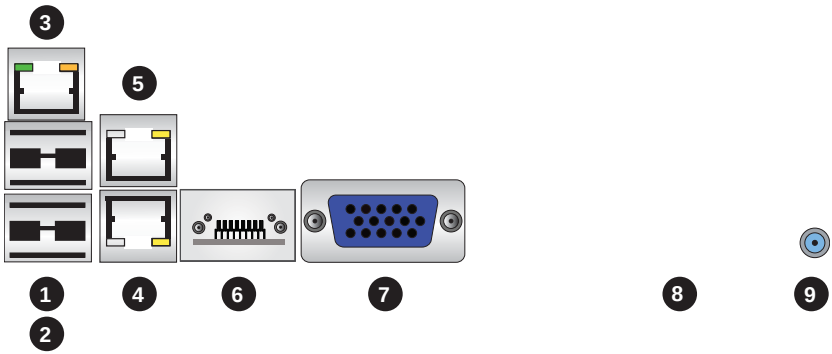

Back Panel I/O Port Locations and Definitions	
1	Backplane USB0
2	Backplane USB1
3	IPMI LAN
4	Gigabit LAN1 (for X9DRT-P/X9DRT-PIBF), 10G LAN (for X9DRT-PT)
5	Gigabit LAN1 (for X9DRT-P/X9DRT-PIBF), 10G LAN (for X9DRT-PT)
6	InfiniBand (IB) Connector (for X9DRT-PIBF)
7	Backplane VGA (Blue)
8	UID LED (on the serverboard)
9	UID Switch

5-4 Processor and Heatsink Installation

Notes:

- Always remove the power cord before adding, removing or changing a CPU.
- When receiving a serverboard without a processor pre-installed, make sure that the plastic CPU socket cap is in place and none of the socket pins are bent; otherwise, contact your retailer immediately.
- If you buy a CPU separately, use only an Intel-certified, multi-directional heatsink.
- Avoid placing direct pressure to the top of the processor package.
- Install the processor into the CPU socket before installing the heatsink.
- Refer to the Supermicro web site for updates on CPU support.

Installing a CPU

1. There are two levers on the LGA 2011 socket. First press and release the load lever labeled "Open 1st".

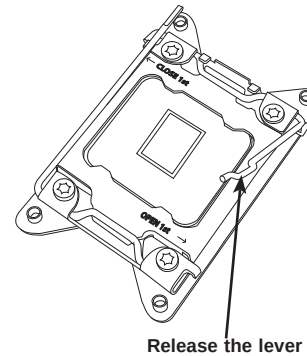

Release the lever labeled "Open 1st"

2. Press the second load lever labeled "Close 1st" to release the load plate from its locked position.

Release the lever labeled "Close 1st"

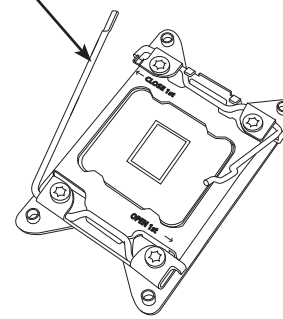

3. With the second lever fully retracted, gently push down on the "Open 1st" lever to loosen the load plate. Lift the load plate with your fingers to open it completely.

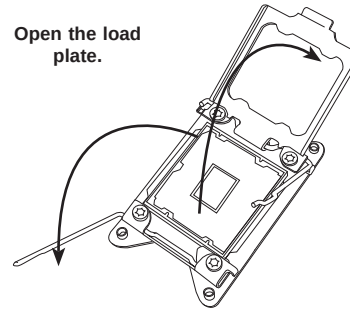

4. Pop the plastic cap marked "Warning" out of the load plate.
5. Holding the CPU carefully above the socket, orient the CPU so that all keys and edges will fit the socket.

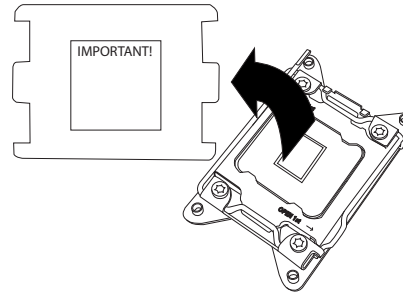

6. Carefully lower the CPU straight down into the socket. Do not move the CPU horizontally, and do not rub the pins of the socket. This may damage the CPU or the socket.

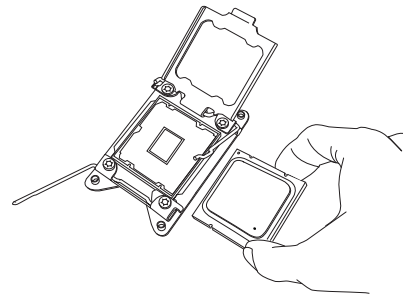

Caution: You can only install the CPU into the socket in one direction. Make sure that the CPU is properly inserted into the socket before closing the load plate. If it does not close properly, do not force it as it may damage your CPU. Instead, open the load plate again and double-check that the CPU is aligned properly.

7. With the "Close 1st" lever fully retracted, gently close the load plate.

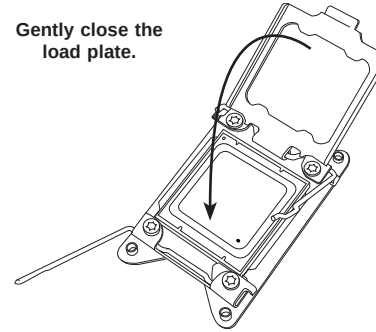

8. Make sure the locking mechanism on the "Close 1st" lever catches the lip of the load plate. Close and lock the "Close 1st" lever.

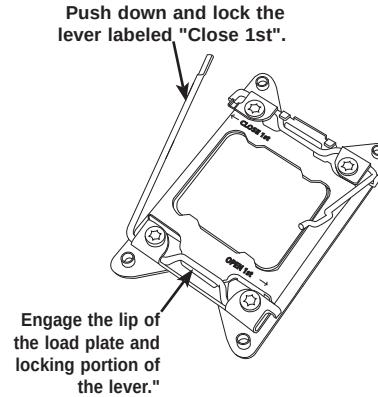

9. Close and lock the "Open 1st" lever.

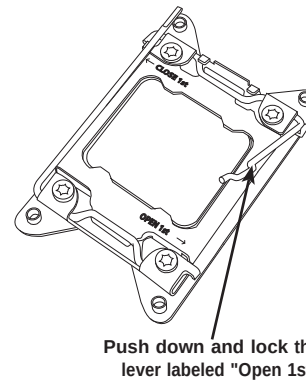

Installing a Passive CPU Heatsink

1. Do not apply any thermal grease to the heatsink or the CPU die -- the required amount has already been applied.
2. Place the heatsink on top of the CPU so that the four mounting holes are aligned with those on the serverboard and the heatsink bracket underneath.
3. Screw in two diagonal screws (i.e., the #1 and the #2 screws) until just snug (to avoid possible damage to the CPU do not over-tighten the screws.)
4. Finish the installation by fully tightening all four screws.

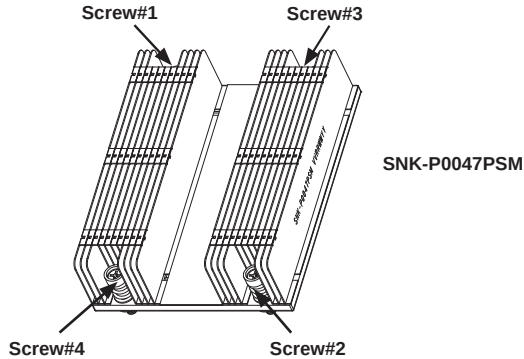

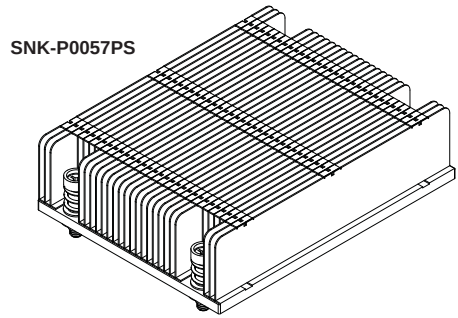

Removing the Heatsink

Caution: We DO NOT recommend that the CPU or the heatsink be removed. However, if you do need to uninstall the heatsink, please follow the instructions below to prevent damage to the CPU or the CPU socket.

1. Unscrew the heatsink screws from the serverboard in the sequence as shown in the illustration below.
2. Gently wriggle the heatsink to loosen it from the CPU. (Do not use excessive force when wriggling the heatsink!)
3. Once the heatsink is loosened, remove the heatsink from the CPU socket.
4. Remove the used thermal grease and clean the surface of the CPU and the heatsink, Reapply the proper amount of thermal grease on the surface before reinstalling the heatsink.

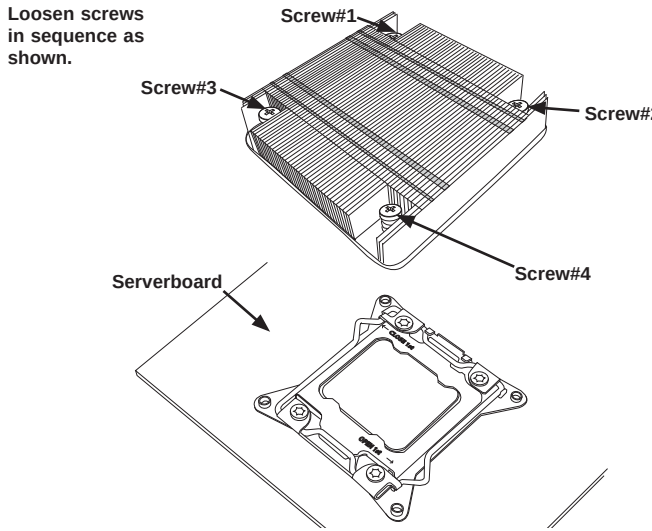

5-5 Installing Memory

Installing Memory

1. Insert each memory module vertically into its slot, paying attention to the notch along the bottom of the module to prevent inserting the module incorrectly (see Figure 5-2).
2. Install to slots P1/DIMM1A, P1/DIMM2A, etc. For best performance always use the same memory type and speed in the same memory bank. See support information below.
3. Gently press down on the memory module until it snaps into place.
4. With two CPUs installed, repeat step 2 to populate the CPU2 DIMM slots.

Notes:

- Up to 1 GB, 2 GB, 4 GB, 8 GB, 16 GB or 32 GB size memory modules are supported. See the table below for memory sizes for the various memory types..

DIMM Sizes	
Memory Type	**Memory Sizes**
RDIMM	1GB, 2GB, 4GB, 8GB,16GB and 32GB @ 1.35V/1.5V
UDIMM	512MB, 1GB, 2GB, 4GB, and 8GB
LRDIMM	8GB,16GB, 32GB, and 64GB

- It is highly recommended that you remove the power cord from the system before installing or changing memory modules.
- Please refer to our web site for memory that has been tested on the X9DRT-P/PIBF/PT serverboard.

Memory Support

The X9DRT-P/PIBF/PT serverboard supports up to 1 TB of 240-pin Registered (RDIMM)/Load Reduced (LRDIMM) ECC or Unbuffered (UDIMM) ECC/Non-ECC DDR3-1866/1600/1333/1066/800 MHz speed, 4-channel memory in sixteen (16) slots. For the latest memory updates, please refer to our website a at http://www.supermicro.com/products/serverboard.

Populating two slots at a time with memory modules of the same size and type will result in interleaved (128-bit) memory, which is faster than non-interleaved (64-bit) memory.

Note: Check the Supermicro website (www.supermicro.com) for the latest memory support information.

Maximum Memory

The X9DRT-P/PIBF/PT serverboard supports up to 1 TB of ECC RDIMM memory in sixteen (16) DIMM slots.

Figure 5-2. Installing DIMM into Slot

To Install: Insert module vertically and press down until it snaps into place. Pay attention to the alignment notch at the bottom.

To Remove: Use your thumbs to gently push the release tabs near both ends of the module. This should release it from the slot.

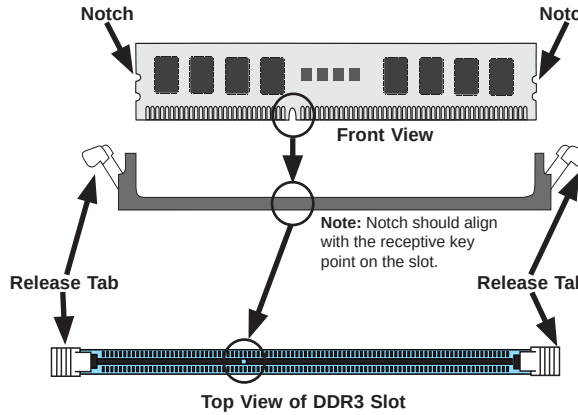

Processor & Memory Module Population Configuration

For memory to work properly, follow the tables below for memory population.

Processors and their Corresponding Memory Modules								
CPU#	**Corresponding DIMM Modules**							
CPU 1	P1-DIMMA1	P1-DIMMB1	P1-DIMMC1	P1-DIMMD1	P1-DIMMA2	P1-DIMMB2	P1-DIMMC2	P1-DIMMD2
CPU2	P2-DIMME1	P2-DIMMF1	P2-DIMMG1	P2-DIMMH1	P2-DIMME2	P2-DIMM F2	P2-DIMMG2	P2-DIMMH2

Processor and Memory Module Population for Optimal Performance	
Number of CPUs+DIMMs	**CPU and Memory Population Configuration Table (For memory to work properly, follow the instructions below)**
1 CPU & 2 DIMMs	CPU1: P1-DIMMA1/P1-DIMMB1
1 CPU & 4 DIMMs	CPU1: P1-DIMMA1/P1-DIMMB1, P1-DIMMC1/P1-DIMMD1
1 CPU & 5~8 DIMMs	CPU1: P1-DIMMA1/P1-DIMMB1, P1-DIMMC1/P1-DIMMD1 + Any memory pairs in P1-DIMMA2/P1-DIMMB2/P1-DIMMC2/P1-DIMMD2 slots
2 CPUs & 4 DIMMs	CPU1 + CPU2: P1-DIMMA1/P1-DIMMB1, P2-DIMME1/P2-DIMMF1
2 CPUs & 6 DIMMs	CPU1 + CPU2: P1-DIMMA1/P1-DIMMB1/P1-DIMMC1/P1-DIMMD1, P2-DIMME1/P2-DIMMF1
2 CPUs & 8 DIMMs	CPU1 + CPU2: P1-DIMMA1/P1-DIMMB1/P1-DIMMC1/P1-DIMMD1, P2-DIMME1/P2-DIMMF1/P2-DIMMG1/P2-DIMMH1
2 CPUs & 10~16 DIMMs	CPU1/CPU2: P1-DIMMA1/P1-DIMMB1/P1-DIMMC1/P1-DIMMD1, P2-DIMME1/P2-DIMMF1/P2-DIMMG1/P2-DIMMH1 + Any memory pairs in P1, P2 DIMM slots
2 CPUs & 16 DIMMs	CPU1/CPU2: P1-DIMMA1/P1-DIMMB1/P1-DIMMC1/P1-DIMMD1, P2-DIMME1/P2-DIMMF1/P2-DIMMG1/P2-DIMMH1,P1-DIMMA2/P1-DIMMB2/P1-DIMMC2/P1-DIMMD2, P2-DIMME2/P2-DIMMF2/P2-DIMMG2/P2-DIMMH2

Installing UDIMM (ECC/Non-ECC) Memory

Intel E5-2600(V2) Series Processor UDIMM Memory Support									
Ranks Per DIMM & Data Width	**Memory Capacity Per DIMM (See the Note below)**			**Speed (MT/s) and Voltage Validated by Slot per Channel (SPC) and DIMM Per Channel (DPC)**					
				1 Slot Per Channel		**2 Slots Per Channel**			
				1DPC		**1DPC**		**2DPC**	
				1.35V	**1.5V**	**1.35V**	**1.5V**	**1.35V**	**1.5V**
SRx8 Non-ECC	1GB	2GB	4GB	NA	1066, 1333, 1600, 1866	NA	1066, 1333, 1600	NA	1066, 1333, 1600
DRx8 Non-ECC	2GB	4GB	8GB	NA	1066, 1333, 1600, 1866	NA	1066, 1333, 1600	NA	1066, 1333, 1600
SRx16 Non-ECC	512MB	1GB	2GB	NA	1066, 1333, 1600, 1866	NA	1066, 1333, 1600	NA	1066, 1333, 1600
SRx8 ECC	1GB	2GB	4GB	1066, 1333, 1600	1066, 1333, 1600, 1866	1066, 1333, 1600, 1866	1066, 1333, 1600	1066	1066, 1333, 1600
DRx8 ECC	2GB	4GB	8GB	1066, 1333, 1600	1066, 1333, 1600, 1866	1066, 1333, 1600, 1866	1066, 1333, 1600	1066	1066, 1333, 1600

Note: For detailed information on memory support and updates, please refer to the SMC Recommended Memory List posted on our website at http://www.supermicro.com/support/resources/mem.cfm.

Installing RDIMM (ECC) Memory

Intel E5-2600(V2) Series Processor RDIMM Memory Support									
Ranks Per DIMM & Data Width	**Memory Capacity Per DIMM (See the Note Below)**			**Speed (MT/s) and Voltage Validated by Slot per Channel (SPC) and DIMM Per Channel (DPC)**					
				1 Slot Per Channel		**2 Slots Per Channel**			
				1DPC		**1DPC**		**2DPC**	
				1.35V	**1.5V**	**1.35V**	**1.5V**	**1.35V**	**1.5V**
SRx8	1GB	2GB	4GB	1066, 1333, 1600	1066, 1333, 1600, 1866	1066, 1333, 1600	1066, 1333, 1600, 1866	1066, 1333, 1600	1066, 1333, 1600, 1866
DRx8	2GB	4GB	8GB	1066, 1333, 1600	1066, 1333, 1600, 1866	1066, 1333, 1600	1066, 1333, 1600, 1866	1066, 1333, 1600	1066, 1333, 1600, 1866
SRx4	2GB	4GB	8GB	1066, 1333, 1600	1066, 1333, 1600, 1866	1066, 1333, 1600	1066, 1333, 1600, 1866	1066, 1333, 1600	1066, 1333, 1600, 1866
DRx4	4GB	8GB	16GB	1066, 1333, 1600	1066, 1333, 1600, 1866	1066, 1333, 1600	1066, 1333, 1600, 1866	1066, 1333, 1600	1066, 1333, 1600
QRx4	8GB	16GB	32GB	800, 1333	1066, 1333	800, 1333	1066, 1333	800, 1333	800, 1333
QRx8	4GB	8GB	16GB	800, 1333	1066, 1333	800, 1333	1066, 1333	800, 1333	800, 1333

Note: For detailed information on memory support and updates, please refer to the SMC Recommended Memory List posted on our website at http://www.supermicro.com/support/resources/mem.cfm.

Installing LRDIMM (ECC) Memory

Intel E5-2600(V2) Series Processor LRDIMM Memory Support						
Ranks Per DIMM & Data Width	**Memory Capacity Per DIMM (See the Note Below)**		**Speed (MT/s) and Voltage Validated by Slot per Channel (SPC) and DIMM Per Channel (DPC)**			
			1 Slot Per Channel		**2 Slots Per Channel**	
			1DPC		**1DPC and 2DPC**	
			1.35V	**1.5V**	**1.35V**	**1.5V**
QRx4 (DDP)	16GB	32GB	1066, 1333, 1600	1066, 1333, 1600	1066, 1333	1066, 1333
QRx8 (P)	8GB	16GB	1066, 1333, 1600	1066, 1333, 1600	1066, 1333	1066, 1333
Note: For detailed information on memory support and updates, please refer to the SMC Recommended Memory List posted on our website at http://www.supermicro.com/support/resources/mem.cfm.						

Other Important Notes and Restrictions

- For the memory modules to work properly, please install DIMM modules of the same type, same speed and same operating frequency on the serverboard. Mixing of RDIMMs, UDIMMs or LRDIMMs is not allowed. Do not install both ECC and Non-ECC memory modules on the same serverboard.
- Using DDR3 DIMMs with different operating frequencies is not allowed. All channels in a system will run at the lowest common frequency.

5-6 Adding PCI Expansion Cards

The 2027PR-HC0R-HC0TR-HC0FR includes four preinstalled riser cards (one per node) designed specifically for use in the SC217HQ+-R2K02B 2U rackmount chassis. These riser cards support low-profile PCI Express x16 cards to fit inside the chassis.

Installing an Expansion Card

1. After powering down the system, remove the PCI slot shield.
2. Fully seat the card into the slot, pushing down with your thumbs evenly on both sides of the card.
3. Finish by using a screw to secure the top of the card shield to the chassis. The PCI slot shield protects the serverboard and its components from EMI and aid in proper ventilation, so make sure it is always in place.

Note: See Chapter 6 for more installation details.

5-7 Serverboard Details

Figure 5-3. X9DRT-P/PIBF/PT Serverboard Layout
(not drawn to scale)

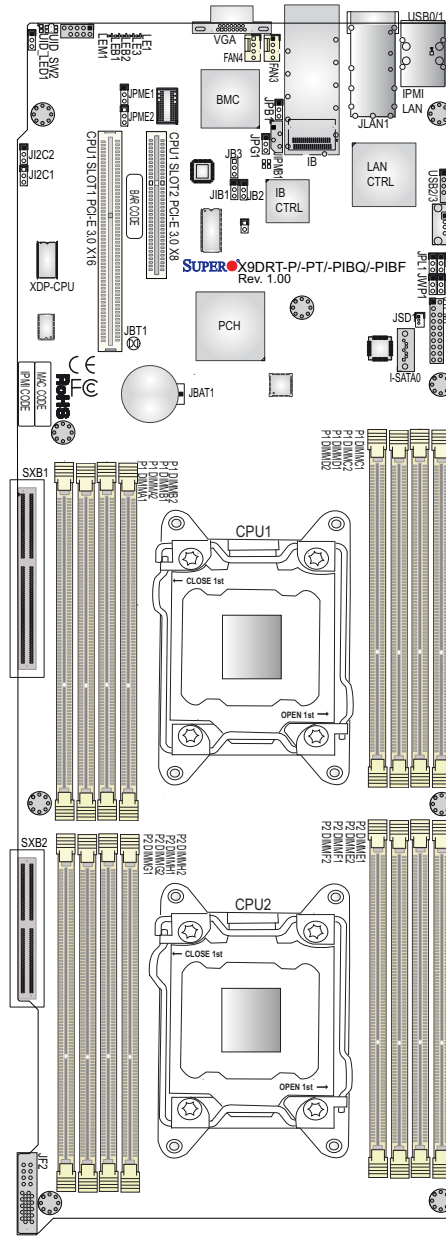

Notes:

1. For the latest CPU/Memory updates, please refer to our website at http://www.supermicro.com/products/serverboard/ for details.
2. Use only the correct type of onboard CMOS battery as specified by the manufacturer. Do not install the onboard battery upside down to avoid possible explosion.
3. " " indicates the location of "Pin 1".
4. The Add-On card header located at JF2 for an SMC-proprietary Add-On card to provide power, SATA and front panel control support.
5. When the Onboard Power LED (LE1) is on, the system power is on. Unplug the power cable before installing or removing any components.
6. Changing BMC log-in information is recommended upon system bootup. The default username is ADMIN and password is ADMIN. For BMC best practices, please refer to: http://www.supermicro.com/products/nfo/files/IPMI/Best_Practices_BMC_Security.pdf.

X9DRT-P/PIBF/PT Quick Reference

Jumper	Description	Default Setting
JBT1	Clear CMOS	Open (Normal)
JIB1	InfiniBand (IB) Enable (for X9DRT-PIBF Only)	Pins 1-2 (Enabled)
JI²C1/JI²C2	PCI-Exp. Slot to SMC	Open (Normal)
JPB1	BMC Enable	Pins 1-2 (Enabled)
JPG1	VGA Enable	Pins 1-2 (Enabled)
JPL1	LAN (Ethernet) Port1 Enable	Pins 1-2 (Enabled)
JPME1	Management Engine (ME) Recovery Mode	Pins 1-2 (Normal)
JPME2	Management Engine (ME) Manufacture Mode	Pins 1-2 (Normal)
JWD1	Watch Dog	Pins 1-2 (Reset)

LED	Description	State	Status
LE1	Onboard Power LED	On	Power On
LE3	HDD LED	Green: On	HDD/SATA Active
LEB1	IB (InfiniBand) Link	Green: On	IB Connected
LEB2	IB (InfiniBand) Activity	Yellow: Blinking	IB Active
LEM1	BMC Heartbeat LED	Green: Blinking	BMC Normal
UID LED1	UID LED	Blue: On	Unit Identified

Connector	Description
IB	InfiniBand Connector supported by the Mellano Connect-X3QDR/FDRIB chip (for X9DRT-PIBF Only)
JBAT1	Onboard Battery
JF2	SMC Proprietary Add-On Card for Power, FP Control & SATA Connections
JIPMB1	4-pin External BMC I^2C Header (for an IPMI Card)
JLAN1	1_ Gigabit Ethernet LAN Port supported by the Intel i350 chip (for X9DRT-P/PIBQ/PIBF)
JLAN1	10_Gigabit Ethernet LAN Port 1 by the Intel X540 chip (for X9DRT-PT only)
JSD1	SATA DOM (Device_on_Module) Power Connector
JTPM1	TPM (Trust Platform Module)/Port 80 Header
(I-)SATA0	SATA 0 Connector supported by Intel PCH
(CPU1) Slot1	PCI-E 3.0 x16 Slot
(CPU1) Slot2	PCI-E 3.0 x8 Slot
SXB1	PCI-E 3.0 x16 Slot1 for SMC-Proprietary Daughter (Add-On) Card
SXB2	PCI-E 3.0 x8 Slot2 for SMC-Proprietary Storage Add-On Card
UIDSW2	UID (Unit Identifier) Switch
USB 0/1	Back Panel USB Ports 0/1
USB 2/3	Front Accessible USB Connections 2/3
USB 4	Type A USB Connection (USB 4) for Front Access
VGA	Backpanel VGA Port

.

5-8 Connector Definitions

SMC-Proprietary Add-On Card Slot for PWR Supply/FP Control/SATA Connections

JF2 is an SMC-Proprietary Add-On card slot to provide power supply, front panel control, and SATA connections. The BPN-ADP-6SATA3P-O-P adapter cardis supported by this serverboard. These adapter cards are designed specifically for use with Supermicro's server chassis. For your system to work properly, be sure to have an appropriate adapter card installed in JF2 on your serverboard.

Universal Serial Bus Ports

Two Universal Serial Bus ports (USB 0/1) are located on the I/O back panel. In addition, a USB header, located next to the LAN controller, provides two front-accessible USB connections (USB 2/3). In addition, a Type A USB connection (USB 4), located next to the USB 2/3 header, also provides front panel USB support on the serverboard. (Cables are not included.) See the tables on the right for pin definitions.

Universal Serial Bus Ports (USB 0/1, USB4) Pin Definitions

USB0/1		USB6	
Pin#	Definition	Pin#	Definition
1	+5V	1	+5V
2	PO-	2	PO-
3	PO+	3	PO+
4	Ground	4	Ground

Universal Serial Bus Headers (USB2/3) Pin Definitions

JUSB2, JUSB3			
Pin#	Definition	Pin#	Definition
1	+5V	2	+5V
3	PO-	4	PO-
5	PO+	6	PO+
7	Ground	8	Ground
9	Key	10	NC

Note: NC indicates no connection.

LAN1 (Ethernet Ports)

A LAN (Ethernet) Port 1 is located at JLAN1 on the I/O backplane on the serverboard. This LAN port supports Gigabit_LAN on the X9DRT-P/X9DRT-PIBF serverboards, and supports 10G_LAN on the X9DRT-PT serverboard. Additionally, there is a dedicated LAN for IPMI on top of the two rear USB ports. These Ethernet ports accept RJ45 type cables

Note: Please refer to the LED Indicator Section for LAN LED information.

LAN Ports (LAN1) Pin Definitions

Pin#	Definition	Pin#	Definition
1	P2V5SB	10	SGND
2	TD0+	11	Act LED
3	TD0-	12	P3V3SB
4	TD1+	13	Link 100 LED (Yellow, +3V3SB)
5	TD1-	14	Link 1000 LED (Yellow, +3V3SB)
6	TD2+	15	Ground
7	TD2-	16	Ground
8	TD3+	17	Ground
9	TD3-	18	Ground

Note: NC indicates no connection.

Unit Identifier Switches

A Unit Identifier (UID) switch is located at UIDSW2 on the I/O panel, and a UID LED indicator is located at UIDLED1 on the serverboard. When the user presses the UID switch, the UID LED indicator will be turned on. Press the UID switch again to turn off the LED indicator. The UID LED Indicator provides easy identification of a system unit that may be in need of service. See the table on the right for pin definitions.

UID Switch (UIDSW2) Pin Definitions

Pin#	Definition
1	Ground
2	Ground
3	Button In
4	Ground

UID Switches & LEDs (UIDLED1)

Description	Location
Rear Switch	UIDSW2
Rear UID LED	UIDLED1

Video Connector

A Video (VGA) connector is located next to Fan 4 on the IO backplane. This connector is used to provide video and CRT display. Refer to the board layout below for the location.

InfiniBand Connection

The onboard InfiniBand (IB) connector is located on the backplane only on the X9DRT-PIBF serverboard. The IB switch is primarily used for high-performance computing. See the table on the right for pin definitions.

InfiniBand (IB) Pin Definitions

Pin#	Definition	Pin#	Definition
1	Ground	2	Transmitter Inverted Data Input
3	Transmitter Non-Inverted Data Input	4	Ground
5	Transmitter Inverted Data Input	6	Transmitter Non-Inverted Data Input
7	Ground	8	Module Select
9	Module Reset	10	+3.3V Power Supply Receiver
11	2-wire Serial Interface Clock	12	2-wire Serial Interface Data
13	Ground	14	Receiver Non-Inverted Data Output
15	Receiver Inverted Data Output	16	Ground
17	Receiver Non-Inverted Data Output	18	Receiver Inverted Data Output
19	Ground	20	Ground
21	Receiver Inverted Data Output	22	Receiver Non-Inverted Data Output
23	Ground	24	Receiver Inverted Data Output
25	Receiver Non-Inverted Data Output	26	Ground
27	Module Present	28	Interrupt
29	+3.3V Power Supply transmitter	30	+3.3V Power Supply
31	Low Poser Mode	32	Ground
33	Transmitter Non-Inverted Data Input	34	Transmitter Inverted Data Input
35	Ground	36	Transmitter Non-Inverted Data Input
37	Transmitter Inverted Data Input	38	Ground

Trusted Platform Module Header

The JTPM1 header is used to connect a Trusted Platform Module (TPM), available separately from a third-party vendor. A TPM is a security device that allows encryption and authentication of hard drives, disallowing access if the TPM associated with it is not installed in the system. See the table on the right for pin definitions.

TPM/Port 80 Header (JTPM1) Pin Definitions

Pin#	Definition	Pin#	Definition
1	LCLK	2	GND
3	LFRAME#	4	<(KEY)>
5	LRESET#	6	+5V (X)
7	LAD 3	8	LAD 2
9	+3.3V	10	LAD1
11	LAD0	12	GND
13	SMB_CLK4	14	SMB_DAT4
15	+3V_DUAL	16	SERIRQ
17	GND	18	CLKRUN# (X)
19	LPCPD#	20	LDRQ# (X)

IPMB I²C SMB

A System Management Bus header for the IPMI slot is located at JIPMB1. Connect an appropriate cable here to use the IPMB I²C connection on your system.

SMB Header (JIPMB1) Pin Definitions

Pin#	Definition
1	Data
2	Ground
3	Clock
4	No Connection

DOM Power Connector

A power connector for SATA DOM (Disk_On_Module) devices is located at JSD1. Connect an appropriate cable here to provide power for your SATA DOM devices.

DOM PWR (JSD1) Pin Definitions

Pin#	Definition
1	+5V
2	Ground
3	Ground

Fan Headers

This serverboard has two system/CPU fan headers (Fan 3/Fan 4) on the serverboard. These 4-pin fans headers are backward compatible with the traditional 3-pin fans. The fan speeds are controlled by firmware thermal management via IPMI 2.0. See the table on the right for pin definitions.

Fan Header Pin Definitions

Pin#	Definition
1	Ground
2	+12V
3	Tachometer
4	Firmware Thermal Control

5-9 Jumper Settings

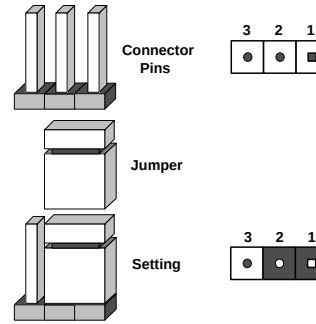

Explanation of Jumpers

To modify the operation of the serverboard, jumpers can be used to choose between optional settings. Jumpers create shorts between two pins to change the function of the connector. Pin 1 is identified with a square solder pad on the printed circuit board. See the diagram at right for an example of jumping pins 1 and 2. Refer to the serverboard layout page for jumper locations.

Note: On two-pin jumpers, "Closed" means the jumper is on and "Open" means the jumper is off the pins.

JBT1 contact pads

CMOS Clear

JBT1 is used to clear CMOS, which will also clear any passwords. Instead of pins, this jumper consists of contact pads to prevent accidentally clearing the contents of CMOS.

To Clear CMOS

1. First power down the system and unplug the power cord(s). It is also recommended that you remove the onboard battery from the serverboard.
2. With the power disconnected, short the CMOS pads with a metal object such as a small screwdriver.
3. Remove the screwdriver (or shorting device).
4. Reconnect the power cord(s) and power on the system.

Note 1. For an ATX power supply, you must completely shut down the system, remove the AC power cord, and then short JBT1 to clear CMOS.

Note 2. Be sure to remove the onboard CMOS Battery before you short JBT1 to clear CMOS.

Note 3. Clearing CMOS will also clear all passwords.

Note 4: *Do not use the PW_ON connector to clear CMOS*.

GLAN Enable/Disable

JPL1 enables or disables the LAN Port 1 (JPLAN1) on the serverboard. See the table on the right for jumper settings. The default setting is Enabled.

GLAN Enable (JPL1) Jumper Settings	
Jumper Setting	Definition
Pins 1-2	Enabled (default)
Pins 2-3	Disabled

Watch Dog Enable/Disable

Watch Dog (JWD1) is a system monitor that can reboot the system when a software application hangs. Close pins 1-2 to reset the system if an application hangs. Close pins 2-3 to generate non-maskable interrupt signals for the application that hangs. See the table on the right for jumper settings. Watch Dog must also be enabled in the BIOS.

Watch Dog (JWD1) Jumper Settings	
Jumper Setting	Definition
Pins 1-2	Reset (default)
Pins 2-3	NMI
Open	Disabled

VGA Enable

Jumper JPG1 allows the user to enable the onboard VGA connectors. The default setting is 1-2 to enable the connection. See the table on the right for jumper settings.

VGA Enable (JPG1) Jumper Settings	
Jumper Setting	Definition
Pins 1-2	Enabled (Default)
Pins 2-3	Disabled

BMC Enable

Jumper JPB1 allows you to enable the onboard BMC (Baseboard Management) Controller to provide IPMI 2.O/KVM support on the serverboard. See the table on the right for jumper settings.

BMC Enable (JPB1) Jumper Settings	
Jumper Setting	Definition
Pins 1-2	Enable (Default)
Pins 2-3	Normal

Management Engine (ME) Recovery

Use Jumper JPME1 to select ME Firmware Recovery mode, which will limit resource allocation for essential system operation only in order to maintain normal power operation and management. In the single operation mode, online upgrade will be available via Recovery mode. See the table on the right for jumper settings.

ME Recovery (JPME1) Jumper Settings	
Jumper Setting	Definition
Pins 1-2	Normal (Default)
Pins 2-3	ME Recovery

Manufacture Mode Select

Close Pin 2 and Pin 3 of Jumper JPME2 to bypass SPI flash security and force the system to operate in the Manufacture Mode, allowing the user to flash the system firmware from a host server for system setting modifications. See the table on the right for jumper settings.

ME Mode Select (JPME2) Jumper Settings	
Jumper Setting	Definition
Pins 1-2	Normal (Default)
Pins 2-3	Manufacture Mode

I2C Bus to PCI-Exp. Slots

Jumpers JI^{2}C1 and JI^{2}C2 allow you to connect the System Management Bus (I^{2}C) to PCI-Express slots. The default setting is Open to disable the connection. See the table on the right for jumper settings.

I2C to PCI-E (JI^{2}C1/JI^{2}C2) Jumper Settings	
Jumper Setting	Definition
Pins 1-2	Enabled
Pins 2-3	Disabled (Default)

InfiniBand (IB) Enable

Jumper JIB1 allows the user to enable the onboard InfiniBand connector for the X9DRT-PIBF serverboard. The default setting is 1-2 to enable the connection. See the table on the right for jumper settings.

InfiniBand Enable (JIB1) Jumper Settings	
Jumper Setting	Definition
Pins 1-2	Enabled (Default)
Pins 2-3	Disabled

5-10 Onboard Indicators

LAN LEDs

The Ethernet LAN port is located on the IO Backplane on the serverboard. Each LAN port has two LEDs. The Yellow LED indicates activity. The Link LED on the left side of the LAN port may be green, amber or off to indicate the speed of the connection. See the tables on the right for more information.

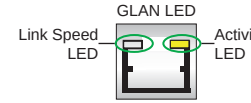

LAN Link Indicator LED Settings	
LED Color	Definition
Off	No Connection, 10 or 100 Mbps
Amber	1 Gbps
Green	10 Gbps (X9DRT-PT only)

LAN LED Indicator Settings		
LAN Speeds	1 Gbps	10 Gbps
10/100	Green	Off
1G	Amber	Amber
10G (X9DRT-PT only)	N/A	Green

IPMI Dedicated LAN LEDs

In addition to the LAN Port 1, an IPMI Dedicated LAN is also located on the I/O Backplane. The amber LED on the right indicates connection and activity; while the green LED on the left indicates the speed of the connection. See the tables at right for more information.

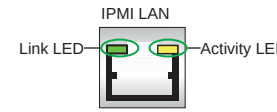

IPMI LAN Link/Speed LED (Left) & Activity LED (Right)		
Color	Status	Definition
Off	Off	No Connection
Green: Solid	Link/ Speed (Left)	100 Mb/s
Amber Blinking	Activity (Right)	Active

BMC Heartbeat LED

A BMC Heartbeat LED is located at LEM1 on the serverboard. When LEM1 is blinking, BMC functions normally. See the table at right for more information.

BMC Heartbeat LED (LEM1) Status	
Color/State	Definition
Green: Blinking	BMC:Normal

HDD/SATA LED (LE3)

An HDD/SATA LED Indicator is located at LE3 on the serverboard. This LED indicates the status of hard drive activities or SATA activities. Also see the layout below for the LED locations.

HDD/SATA LED (LE3) Settings	
Status	Definition
On	HDD/SATA Connected
Off	No connection

Onboard Power LED

An Onboard Power LED is located at LE1 on the serverboard. When this LED is on, the system is on. Be sure to turn off the system and unplug the power cord before removing or installing components. See the tables on the right for more information.

Onboard PWR LED Indicator (LE1) LED Settings	
LED Color	Status
Off	System Off (PWR cable not connected)
Green	System On
Green: Flashing Quickly	ACPI S1 State

Rear UID LED

The rear UID LED is located at UIDLED1 on the rear of the serverboard. This LED is used in conjunction with the rear UID switch to provide easy identification of a system that might be in need of service. Refer to UID Switch on Page 5-18 for more information.

UID LED (UIDLED1) Status		
Color/State	OS	Status
Blue: On	Windows OS	Unit Identified
Blue: Blinking	Linux OS	Unit Identified

InfiniBand LED Indicators

The X9DRT-PIBF serverboard has two InfiniBand LED Indicators (LEB1/LEB2) that are located on the serverboard. The green LED (LEB1) is the InfiniBand Link LED. The yellow LED (LEB2) indicates activity. Refer to the table on the right for details.

InfiniBand Link LED (LEB1) Settings		
Color	Status	Definition
Green	Solid	InfiniBand Connected
Off	Off	No connection

InfiniBand Activity LED (LEB2) Settings		
Color	Status	Definition
Yellow	Solid	InfiniBand: Active
Yellow	Dim	InfiniBand: Connected, Activity: Idle
Off	Off	No connection

5-11 PCI-Express and Serial ATA Connections

PCI-Express 3.0 x8 Slots

Two PCI-Express 3.0 x8 slots (SXB1/SXB2) are on the serverboard. SXB1 supports an SMC-proprietary daughter card; while SXB2 is used for the SMC-Proprietary add-on card. Refer to the layout below for the locations.

SATA Port

A Serial ATA port (I-SATA0) is located on the serverboard. This port provides serial-link signal support, which is faster than the connections of Parallel ATA. For more information on SATA HostRAID configuration, please refer to the Intel SATA HostRAID User's Guide posted on our Website @ http://www.supermicro.com. See the table on the right for pin definitions.

SATA Port Pin Definitions (I-SATA0~I-SATA5)

Pin #	Definition
1	Ground
2	TXP
3	TXN
4	Ground
5	RXN
6	RXP
7	Ground

5-12 Installing Software

The Supermicro ftp site contains drivers and utilities for your system at ftp://ftp.supermicro.com. Some of these must be installed, such as the chipset driver.

After accessing the ftp site, go into the CDR_Images directory and locate the ISO file for your serverboard. Download this file to create a CD/DVD of the drivers and utilities it contains. (You may also use a utility to extract the ISO file if preferred.)

Another option is to go to the Supermicro Website at http://www.supermicro.com/products/. Find the product page for your serverboard here, where you may download individual drivers and utilities.

After creating a CD/DVD with the ISO files, insert the disk into the CD/DVD drive on your system and the display shown in Figure 5-5 should appear.

Figure 5-6. Driver/Tool Installation Display Screen

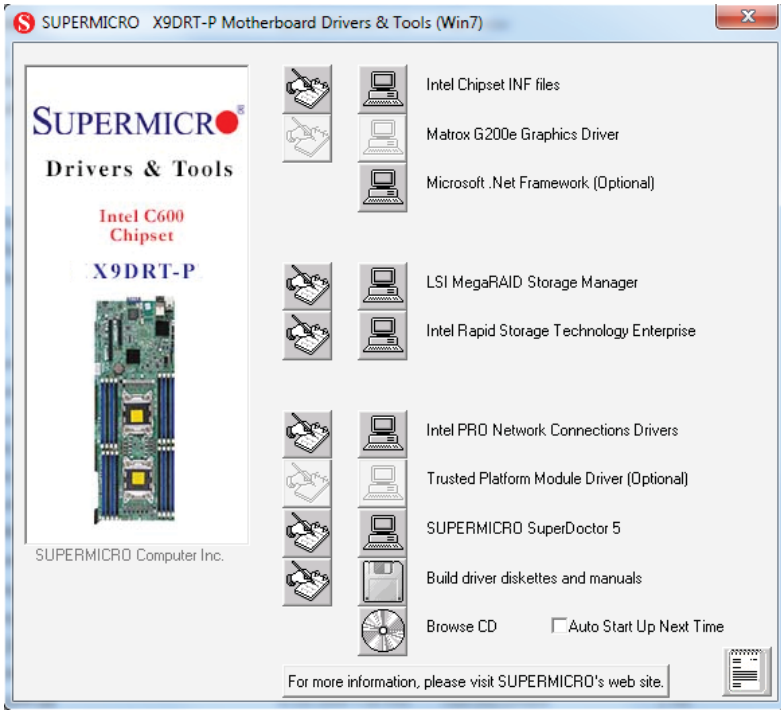

Note: Click the icons showing a hand writing on paper to view the readme files for each item. Click the computer icons to the right of these items to install each item (from top to the bottom) one at a time. **After installing each item, you must re-boot the system before moving on to the next item on the list.** The bottom icon with a CD on it allows you to view the entire contents.

SuperDoctor 5

The Supermicro SuperDoctor® 5 is a hardware and operating system services monitoring program that functions in a command-line or web-based interface in Windows and Linux operating systems. The program monitors system health information such as CPU temperature, system voltages, system power consumption, fan speed, and provides alerts via email or Simple Network Management Protocol (SNMP).

SuperDoctor 5 comes in local and remote management versions and can be used with Nagios to maximize your system monitoring needs. With SuperDoctor 5 Management Server (SSM Server), you can remotely control power on/off and reset chassis intrusion for multiple systems with SuperDoctor 5 or IPMI. SD5 Management Server monitors HTTP, FTP, and SMTP services to optimize the efficiency of your operation.

Note: The default User Name and Password for SuperDoctor 5 is admin / admin.

Figure 5-7. SuperDoctor 5 Interface Display Screen (Health Information)

Figure 5-8. SuperDoctor 5 Interface Display Screen (Remote Control)

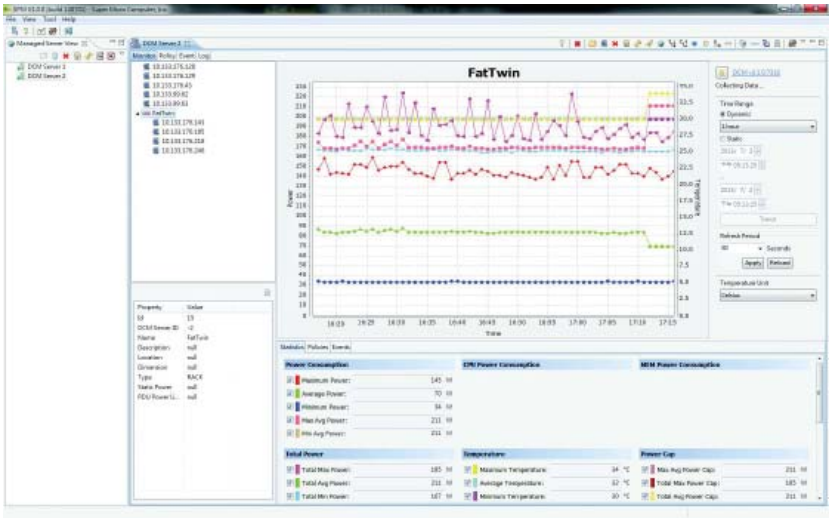

Note: The SuperDoctor 5 program and User's Manual can be downloaded from the Supermicro web site at http://www.supermicro.com/products/nfo/sms_sd5.cfm. For Linux, we recommend that you use the SuperDoctor II application instead.

5-13 Serverboard Battery

Caution: There is a danger of explosion if the onboard battery is installed upside down, which will reverse its polarites (see Figure 5-9). This battery must be replaced only with the same or an equivalent type recommended by the manufacturer (CR2032). Dispose of used batteries according to the manufacturer's instructions.

Figure 5-9. Installing the Onboard Battery

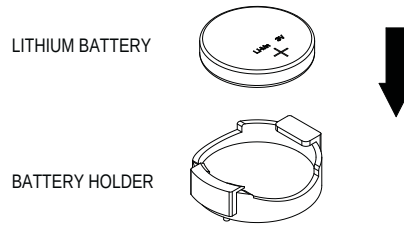

Please handle used batteries carefully. Do not damage the battery in any way; a damaged battery may release hazardous materials into the environment. Do not discard a used battery in the garbage or a public landfill. Please comply with the regulations set up by your local hazardous waste management agency to dispose of your used battery properly.

Notes

Chapter 6

Advanced Chassis Setup

This chapter covers the steps required to install components and perform maintenance on the SC217HQ+-R2K02B chassis. For component installation, follow the steps in the order given to eliminate the most common problems encountered. If some steps are unnecessary, skip ahead to the step that follows.

Tools Required: The only tool you will need to install components and perform maintenance is a Philips screwdriver.

6-1 Static-Sensitive Devices

Electrostatic discharge (ESD) can damage electronic components. To prevent damage to any printed circuit boards (PCBs), it is important to handle them very carefully. The following measures are generally sufficient to protect your equipment from ESD damage.

Precautions

- Use a grounded wrist strap designed to prevent static discharge.
- Touch a grounded metal object before removing any board from its antistatic bag.
- Handle a board by its edges only; do not touch its components, peripheral chips, memory modules or gold contacts.
- When handling chips or modules, avoid touching their pins.
- Put the serverboard, expansion cards and peripherals back into their antistatic bags when not in use.
- For grounding purposes, make sure your computer chassis provides excellent conductivity between the power supply, the case, the mounting fasteners and the serverboard.

Unpacking

The serverboard is shipped in antistatic packaging to avoid static damage. When unpacking the board, make sure the person handling it is static protected.

Figure 6-1. Front and Rear Chassis Views

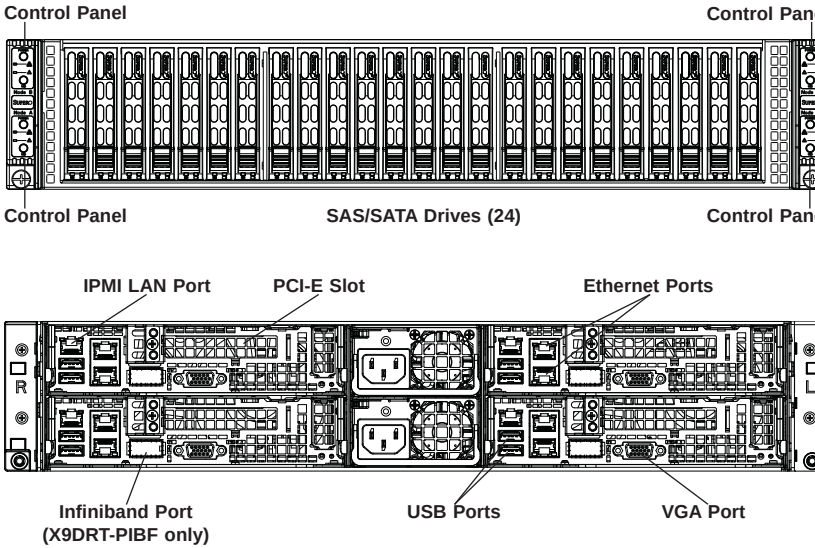

6-2 Removing the Power Cord

1. Use the operating system to power down the node, following the on-screen prompts.
2. After the system has completely shut-down, carefully grasp the head of the power cord and gently pull it out of the back of the power supply.
3. If your system has dual power supplies, remove the cords from both power supplies.
4. Disconnect the cord from the power strip or wall outlet.

6-3 Control Panel

The control panel is located on the front of the chassis. The LEDs inform you of system status.

See Chapter 3 for details on the LEDs and the control panel buttons.

6-4 Chassis Cover

Before operating the SC217 chassis for the first time, it is important to remove the protective film covering the top of the chassis, in order to allow for proper ventilation and cooling.

Removing the Chassis Cover and Protective Film (Figure 6-2)

1. Uplug the AC power cord from any external power source.
2. Remove the two screws which secure the top cover onto the chassis as shown above.
3. Lift the top cover up and off the chassis.
4. Peel off the protective film covering the top cover and the top of the chassis
5. Check that all ventilation openings on the top cover and the top of the chassis are clear and unobstructed.
6. Replace the chassis cover and reconnect the AC power cord.

Figure 6-2. Removing the Chassis Cover

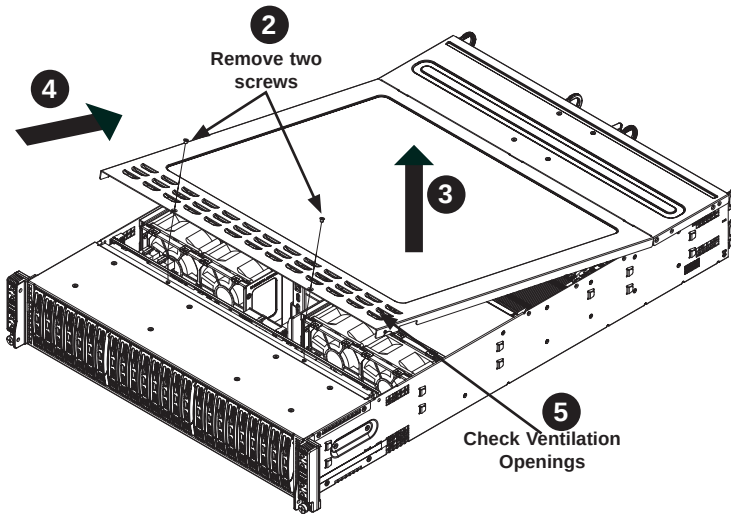

Caution!: Except for short periods of time, do NOT operate the server without the cover in place. The chassis cover must be in place to allow proper airflow and prevent overheating.

6-5 Air Shrouds

Air shrouds concentrate airflow to maximize fan efficiency. The SC217 chassis requires air shrouds for each serverboard node. Air shrouds vary depending upon the serverboard used. See the illustrations below.

Installing an Air Shroud (Figure 6-3)

1. Make sure that the serverboard expansion card (if applicable) and all components are properly installed in each serverboard node.
2. Place the first air shroud over the serverboard, as shown below. The air shroud sits behind the system fans and goes over the top of the serverboard and its components.
3. Repeat the procedure for the remaining three serverboard nodes.

Figure 6-3: Installing the Air Shroud

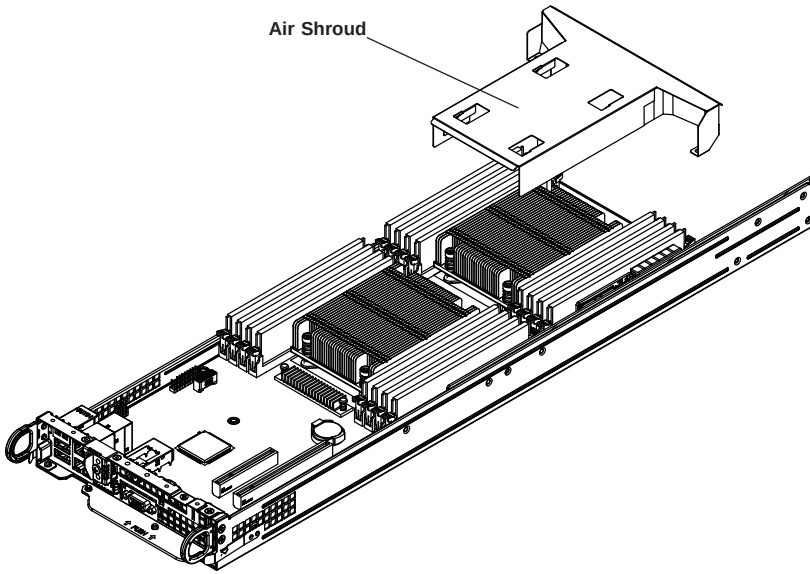

6-6 Checking the Airflow

Checking Airflow

1. Make sure there are no objects obstructing the airflow in and out of the chassis. In addition, if you are using a front bezel, make sure the bezel's filter is replaced periodically.
2. Except for brief periods while swapping hard drives, do not operate the server without drives or the drive carriers in the drive bays. Use only recommended server parts.
3. Make sure no wires or foreign objects obstruct airflow through the chassis. Pull all excess cabling out of the airflow path or use shorter cables.
4. The control panel LEDs inform you of system status. See “Chapter 3: System Interface” for details on the LEDs and the control panel buttons.

6-7 System Fans

Four fans provide cooling for the chassis. These fans circulate air through the chassis as a means of lowering the chassis internal temperature. The SC217 system fans are easy-to-change modules. There is no need to uninstall any other parts inside the system when replacing fans, and no tools are required for installation. These fans are NOT redundant, hot-plug and must be replaced when they fail.

Figure 6-4. System Fan Placement

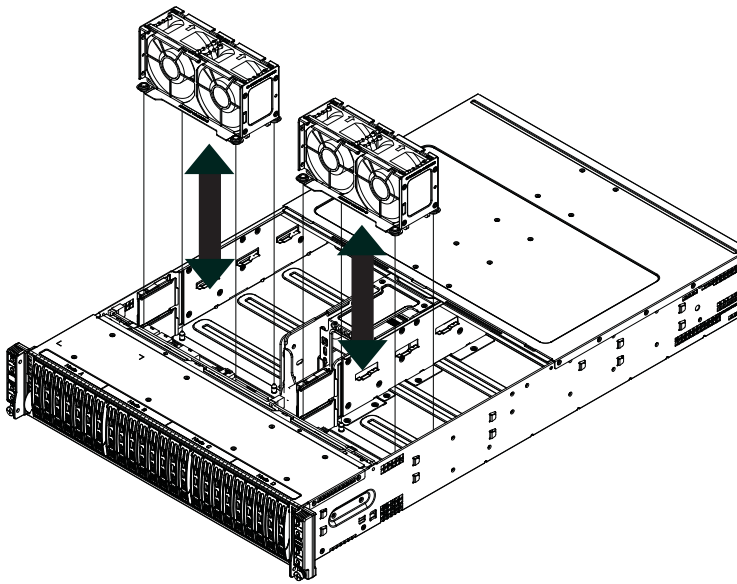

Changing a System Fan

1. If necessary, open the chassis while the system is running to determine which fan has failed. Never run the server for an extended period of time with the chassis cover open.
2. After determining which fan needs to be replaced, power down the associated node as described in Section 6-2.
3. Remove the node drawer from the chassis.
4. Remove the failed fan's power cable from the backplane.
5. Lift the fan housing up and out of the chassis.
6. Push the fan up from the bottom and out of the top of the housing.
7. Place the replacement fan into the vacant space in the housing while making sure the arrows on the top of the fan (indicating air direction) point in the same direction as the arrows on the other fans.
8. Put the fan housing back into the chassis and reconnect the cable.
9. Replace the drawer and confirm that the fan is working properly before replacing the chassis cover.

Figure 6-5. Replacing a System Fan in the Fan Housing

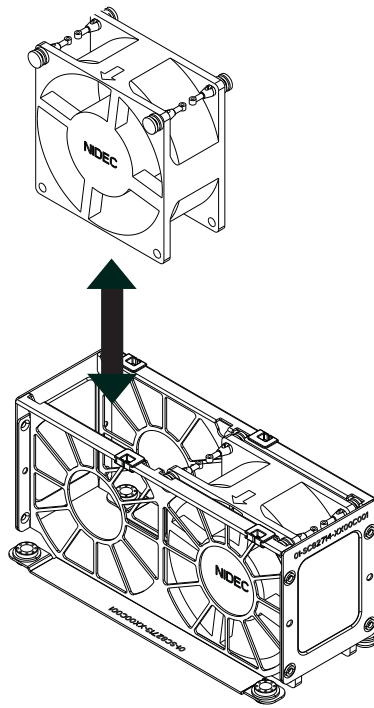

6-8 Removing and Installing the Backplane

The SC217 chassis backplane is located behind the hard drives and in front of the front system fans. Although backplane failure rarely occurs, in the event of a backplane failure, follow the instructions below.

Removing the Backplane

Removing the Backplane from the Chassis

1. Power down and unplug the system from any power source.
2. Remove the chassis cover.
3. Disconnect the cabling to the backplane.
4. Remove all of the hard drive carriers from the front of the chassis.
5. Remove the five upper screws at the top of the backplane and the screw from the side of the chassis, as indicated by the arrows below (Figure 6-6).
6. Remove screw from the side of the chassis

Figure 6-6. Removing the Screws at the Top of the Backplane

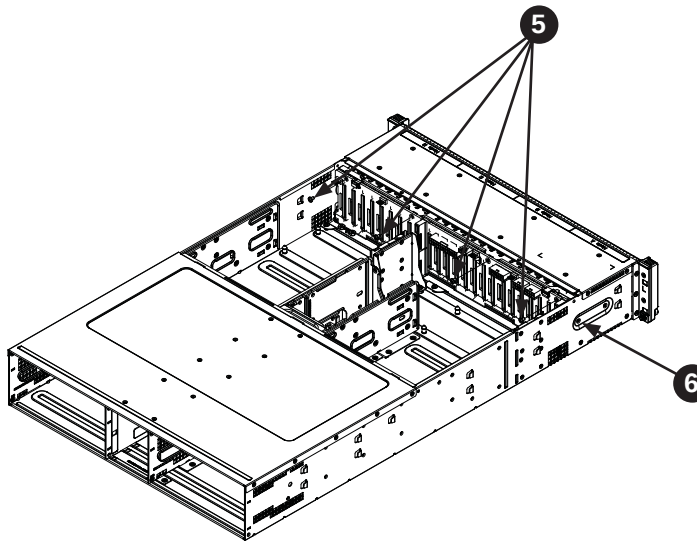

7. Loosen the three screws in the spring bar, located on the floor of the chassis, indicated by the arrows below (Figure 6-7).

Figure 6-7. Loosening the Spring Bar Screws in the Floor of the Chassis

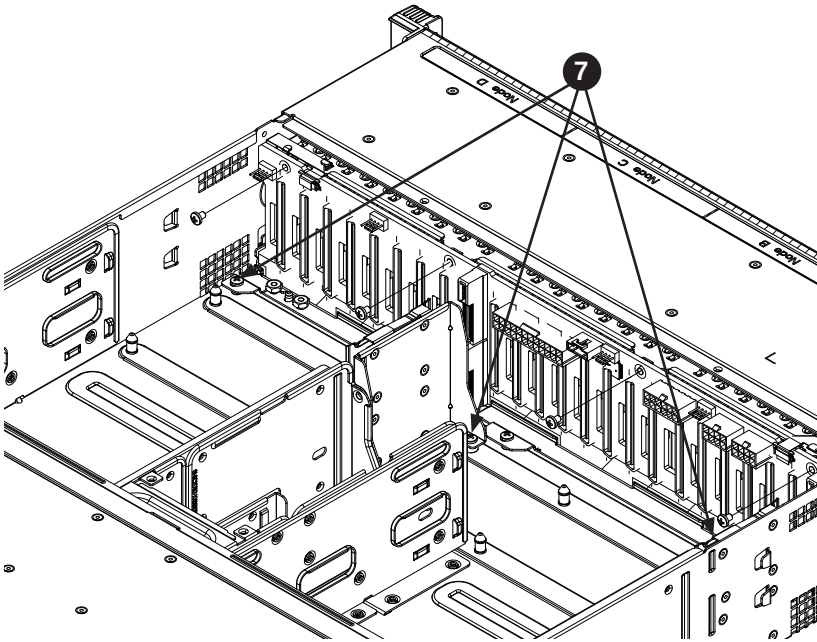

8. Gently ease the backplane up and out of the chassis at a slight angle (Figure 6-8.

Figure 6-8. Removing the Backplane from the Chassis

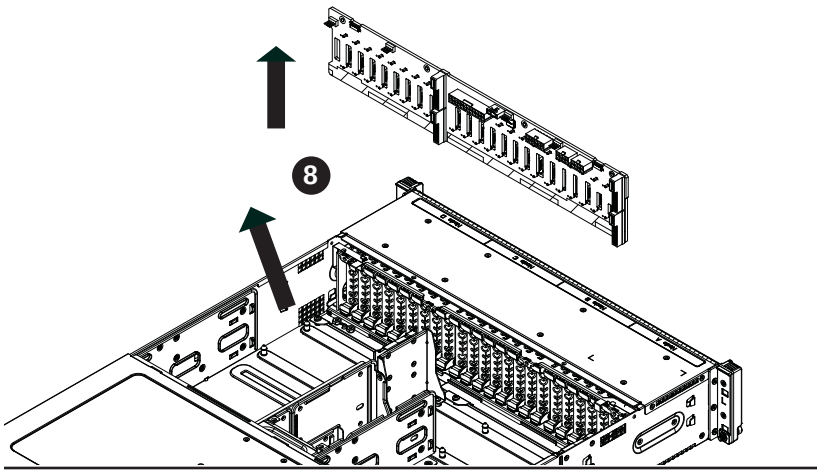

Installing the Backplane

Installing the Backplane into the Chassis (Figure 6-9)

1. Ensure that all of the hard drive carriers have been removed from the bays in the front of the chassis and that the spring bar has been loosened as directed in the previous section.
2. Secure the side mounting bracket to the backplane with the two screws provided.
3. Slide the backplane into the chassis at a slight angle, pushing it up against the side of the chassis.
4. Ease the backplane forward, against the front of the chassis. This will aid in the alignment of the mounting holes.
5. Align the mounting holes in the backplane with the holes in the chassis. Replace the four screws at the top of the backplane and the screw on the side of the chassis.
6. Adjust the spring bar, then tighten the spring bar screws in the floor of the chassis.
7. Reconnect all cables and return the hard drive carriers to their bays in the front of the chassis.
8. Replace the chassis cover and power-up the system.

Figure 6-9. Installing the Backplane

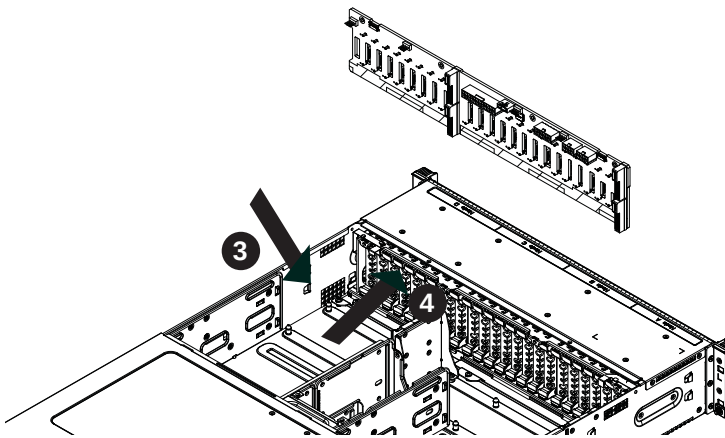

6-9 Installing the Serverboard

Compatible Motherboards

Most Supermicro cableless Twin series motherboards are compatible with the SC217 chassis. For the most up-to-date information on compatible motherboards and other parts, visit the Supermicro Web site at www.supermicro.com.

Hot-swappable motherboards feature different adapter cards, depending upon the serverboard. Adapter cards are optional and are not included with the chassis. For information on ordering adapter cards, see the appendix of this manual or visit the Supermicro Web site at www.supermicro.com.

Permanent and Optional Standoffs

Standoffs prevent short circuits by creating space between the serverboard and the chassis surface. The SC217 chassis includes permanent standoffs in locations used by the motherboards. These standoffs accept the rounded Phillips head screws included in the SC217 accessories packaging.

Some motherboards require additional screws for heatsinks, general components or non-standard security. Optional standoffs are used for these motherboards.

To use an optional standoff, you must place a hexagonal screw through the bottom the chassis and secure the screw with the hexagonal nut (rounded side up).

Depending upon the configuration of the serverboard being used, it is also possible that some of the optional standoffs which are pre-installed in the chassis, may need to be removed.

Figure 6-10. Installing the Serverboard in the Serverboard Node Drawer

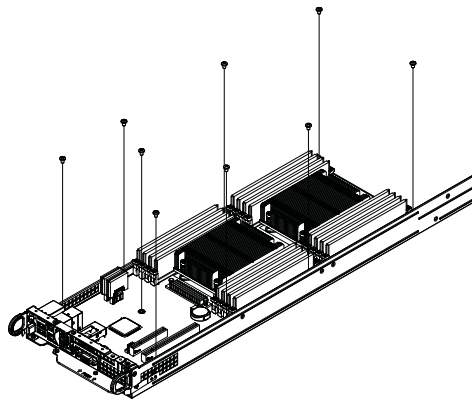

Installing the Serverboard

1. Review the documentation that came with your serverboard. Become familiar with component placement, requirements, cautions, and cable connections.
2. Remove the serverboard node from the back of the chassis. It is not necessary to power down the entire system.

Figure 6-11. Removing Serverboard Node Drawer

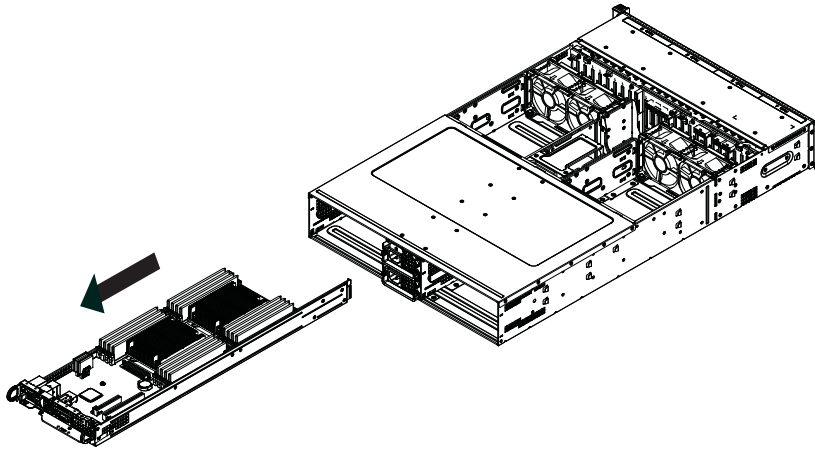

3. Remove the extension card riser card brackets:
   3a. Remove screw securing the bracket to the back of the node drawer.
   3b. Lift the bracket out of the node drawer.
4. Lay the serverboard in the node drawer aligning the standoffs with the serverboard.
5. Secure the serverboard to the node drawer using the rounded, Phillips head screws included for this purpose. Do not exceed eight inch-pounds of torque when tightening.
6. Install the adapter card associated with the serverboard if the chassis is a hot-swappable version. Refer to the next section for instructions on installing the adapter card
7. Secure the CPUs, heatsinks, and other components to the serverboard as described in the serverboard documentation.
8. Connect the cables between the serverboard, backplane, chassis, front panel, and power supply, as needed. Also, fans may be temporarily removed to allow access to the backplane ports.
9. Replace the riser card bracket and secure it with a screw.
10. Repeat for the remaining nodes.

Installing an Adapter Card

Adapter cards connect to the serverboard to the backplane and provide hot-swappable functionality to the node.

Figure 6-12. Adapter Card Installation

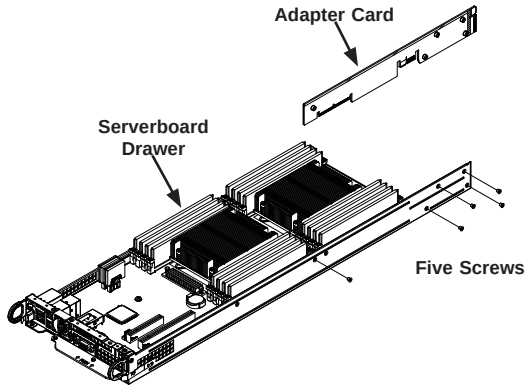

Removing the Adapter Card

1. Remove the node from the back of the chassis. It is not necessary to power down the system.
2. Disconnect the wiring, connecting the adapter card to the serverboard if any is present.
3. Remove the five screws securing the adapter card and the spacer plate to the drawer and set them aside for later use.
4. Remove the adapter card and spacer plate from the serverboard drawer.
5. Set the spacer plate aside for later use.

Installing the Adapter Card

1. Make sure the serverboard has been installed properly in the node drawer before installing the adapter card.
2. Place the adapter card and spacer plate in the node drawer, aligning the holes in the spacer and the adapter card with the holes in the drawer.
3. Secure the adapter card and spacer plate to the serverboard drawer, using the five M3 flathead screws which were previously set aside.
4. Reconnect the wiring from the serverboard to the adapter card if necessary.
5. Return the node drawer to the closed position in the chassis.

6-10 Adding an Expansion Card

The SC217 chassis supports expansion cards. Riser cards are used to mount the expansion cards. The SC217HQ model accommodate one low-profile card per node, for a total of four in the chassis.

Figure 6-13. PCI Slot Configuration

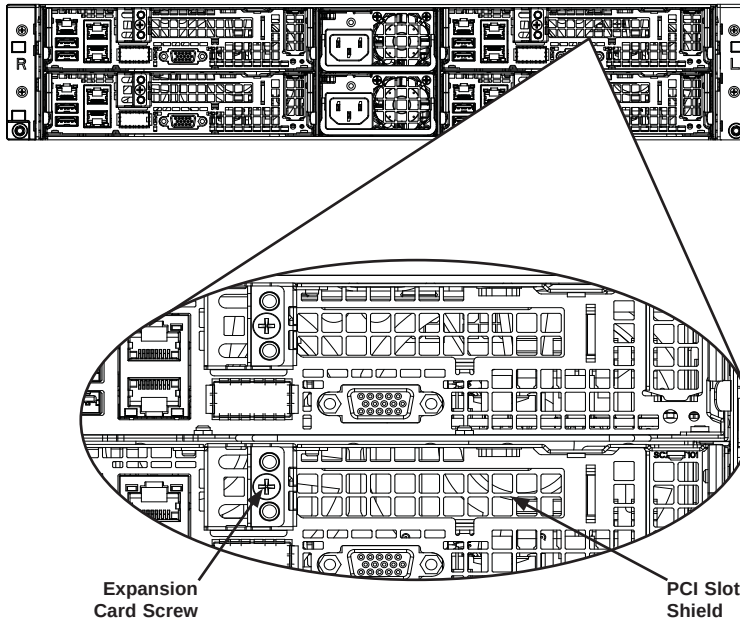

Installing the Riser Card

Installing the Riser Card

1. Use the control panel to power down the computing node, and pull the node drawer out of the chassis.
2. Remove the riser card bracket, removing the screw on the back of the drawer.
3. Align the riser card mounting hole to the bracket standoff and secure the riser card to the bracket using the two screws included in the accessory box.
4. Insert the riser card into the slot on the serverboard.
5. Secure the riser bracket to the rear of the node drawer.

Figure 6-14. Installing the Riser Card

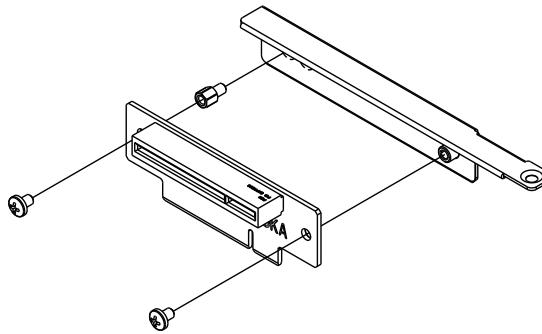

Installing Expansion Cards

1. Use the control panel to power down the computing node, and pull the node drawer out of the chassis.
2. Open the PCI slot clip in the rear of the node drawer and remove the PCI slot shield.
3. If the riser card is not already installed, push it into the serverboard slot.
4. Slide the expansion card into the riser card slot and fit the expansion card shield into the opening in the rear of the node drawer.
5. Close the PCI slot clip to secure the expansion card shield.
6. Secure the riser card screw.
7. Return the node drawer and power-up.

Figure 6-15. Installing the Expansion Card

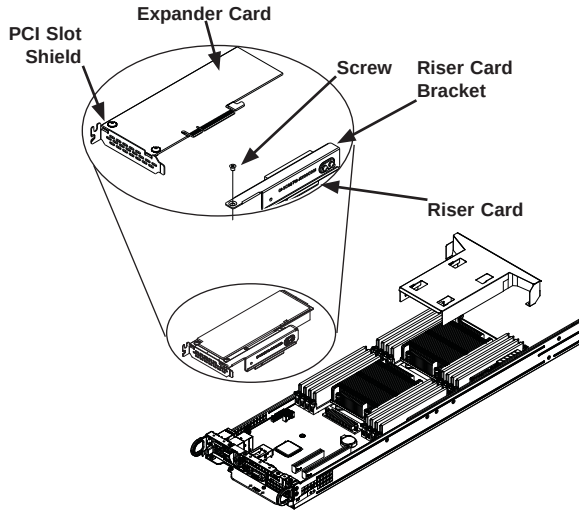

6-11 Drive Bay Installation/Removal

Accessing the Drive Bays

SATA Drives: You do not need to access the inside of the chassis or remove power to replace or swap SATA drives. Proceed to the next step for instructions. You must use standard 1" high, SATA drives in the system.

Note: Refer to the following FTP site for setup guidelines: <ftp://ftp.supermicro.com/driver/SAS/LSI/LSI_SAS_EmbMRAID_SWUG.pdf> and Supermicro's web site for additional inmformation < http://www.supermicro.com/support/manuals/>.

The SC217 chassis contains four individual motherboards in separate node drawers. Each serverboard node controls a set of six hard drives. Note that if a serverboard node drawer is pulled out of the chassis, the hard drives associated with that node will power down as well.

Serverboard Drawer Locations in the Chassis	
Serverboard B Controls HDDs B1, B2, B3, B4, B5 and B6	Serverboard D Controls HDDs D1, D2, D3, D4, D5 and D6
Serverboard A Controls HDDs A1, A2, A3, A4, A5 and A6	Serverboard C Controls HDDs C1, C2, C3, C4, C5 and C6

Figure 6-16. Hard Drives and the Corresponding Motherboards

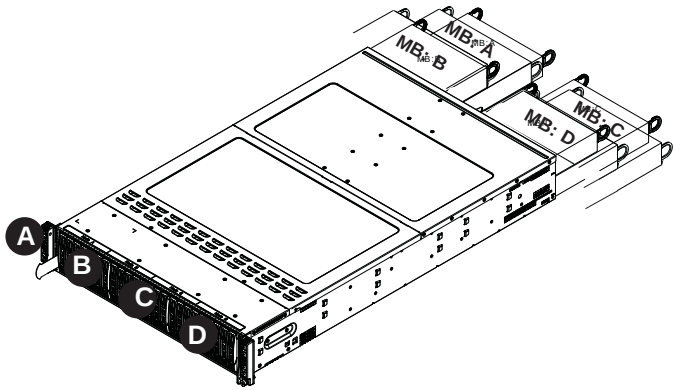

Removing Hard Drive Trays from the Chassis (Figure 6-17)

1. Press the release button on the drive tray. This extends the drive bay handle.
2. Use the handle to pull the drive out of the chassis.

Figure 6-17. Removing Hard Drive

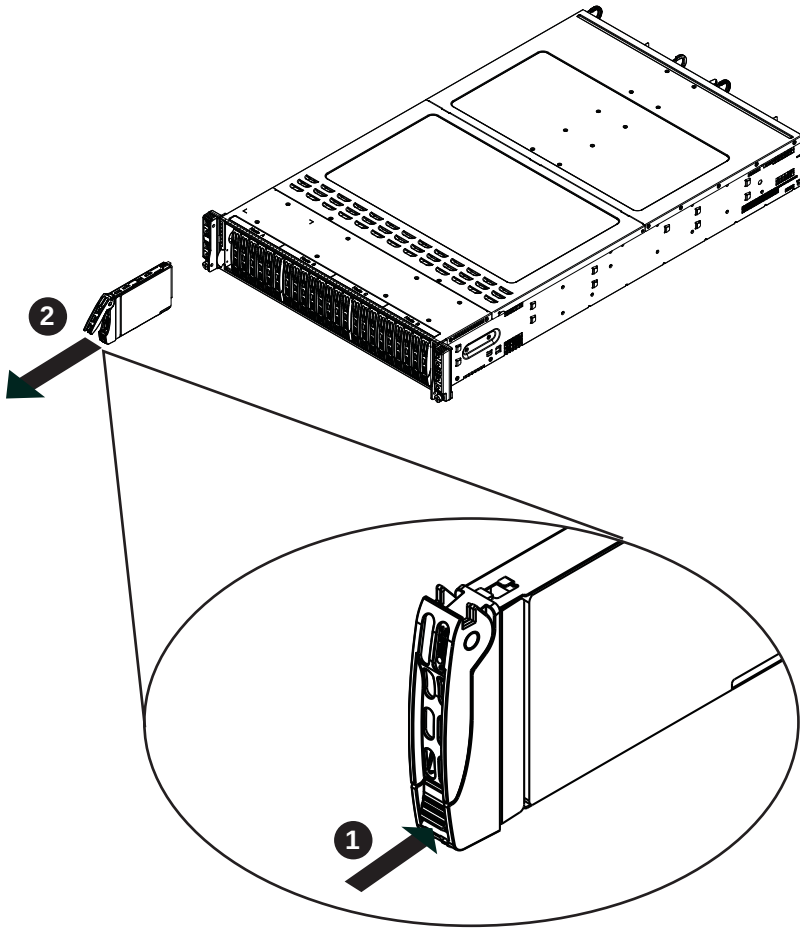

Cauton!: Except for short periods of time while swapping hard drives, do not operate the server with the hard drives empty.

Installing a Drive into the Hard Drive Tray

The drives are mounted in drive carriers to simplify their installation and removal from the chassis. These carriers also help promote proper airflow for the drive bays.

1. Remove the screws (4) holding connecting the drive tray the carrier.
2. Remove the tray from the carrier.
3. Install a new drive into the carrier with the printed circuit board side facing down so that the mounting holes align with those in the carrier.
4. Secure the hard drive by tightening all four (4) screws.
5. Use the open handle to replace the drive carrier into the chassis. Make sure to close the drive carrier handle.

Figure 6-18. Chassis Drive Tray

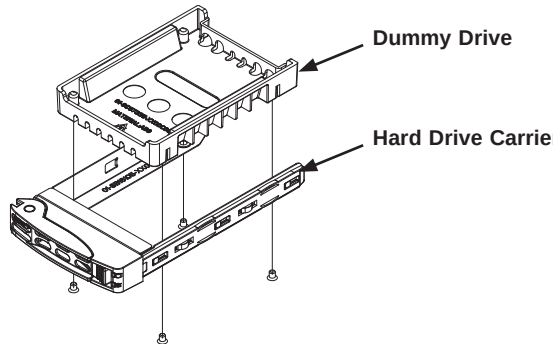

Warning: Enterprise level hard disk drives are recommended for use in Supermicro chassis and servers. For information on recommended HDDs, visit the Supermicro Web site at http://www.supermicro.com/products/nfo/files/storage/SAS-CompList.pdf

6-12 Power Supply

The SC217 chassis includes two 2000 Watt power supplies. This power supply is auto-switching capable. This enables it to automatically sense and operate at a 100v to 240v input voltage. An amber light will be illuminated on the power supply when the power is off. An illuminated green light indicates that the power supply is operating.

Power Supply Replacement

The SC217 chassis utilizes redundant, hot-plug power supplies. In the unlikely event that the power supply unit needs to be replaced, one power supply can be removed, without powering down the system. Replacement units can be ordered directly from Supermicro (See the contact information in the Preface of this manual).

Changing the Power Supply

1. Push the release tab (on the back of the power supply) as illustrated.
2. Pull the power supply out using the handle provided.
3. Push the new power supply module into the power bay until it clicks into the locked position.

Figure 6-19. Changing the Power Supply

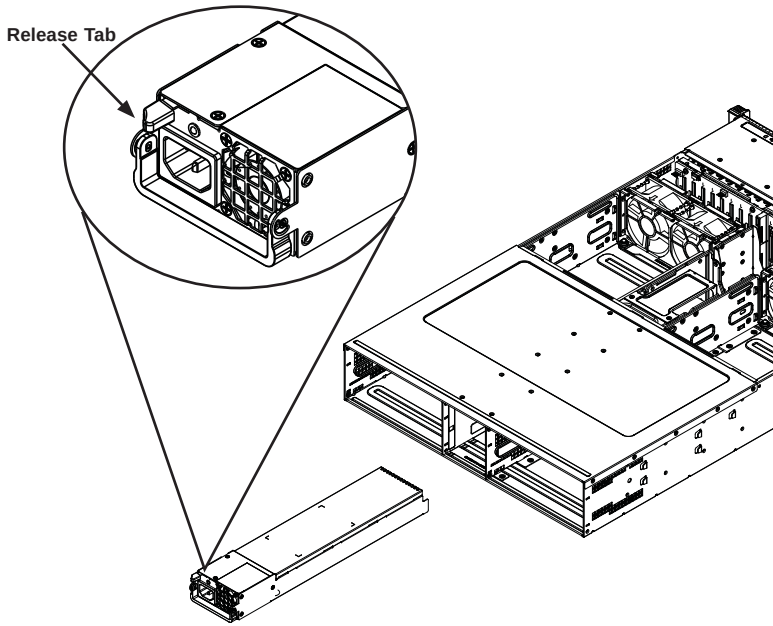

Notes

Chapter 7

BIOS

This chapter describes the AMI BIOS setup utility for the X9DRT-P/-PT/-PIBQ/-PIBF. It also provides the instructions on how to navigate the AMI BIOS setup utility screens. The AMI ROM BIOS is stored in a Flash EEPROM and can be easily updated.

Starting BIOS Setup Utility

To enter the AMI BIOS setup utility screens, press the <Del> key while the system is booting up.

Note: In most cases, the <Del> key is used to invoke the AMI BIOS setup screen. There are a few cases when other keys are used, such as <F3>, <F4>, etc.

Each main BIOS menu option is described in this manual. The Main BIOS setup menu screen has two main frames. The left frame displays all the options that can be configured. Grayed-out options cannot be configured. Options in blue can be configured by the user. The right frame displays the key legend. Above the key legend is an area reserved for informational text. When an option is selected in the left frame, it is highlighted in white. Often informational text will accompany it.

Note: The AMI BIOS has default informational messages built in. The manufacturer retains the option to include, omit, or change any of these informational messages.

The AMI BIOS setup utility uses a key-based navigation system called "hot keys." Most of the AMI BIOS setup utility "hot keys" can be used at any time during setup navigation. These keys include <F3>, <F4>, <Enter>, <ESC>, arrow keys, etc.

Note 1: Options printed in **Bold** are default settings.

Note 2: <F3> is used to load optimal default settings. <F4> is used to save the settings and exit the setup utility.

How To Change the Configuration Data

The configuration data that determines the system parameters may be changed by entering the AMI BIOS setup utility. This Setup utility can be accessed by pressing <Delete> at the appropriate time during system boot.

Note: For AMI UEFI BIOS Recovery, please refer to the UEFI BIOS Recovery User Guide posted @http://www.supermicro.com/support/manuals/.

Starting the Setup Utility

Normally, the only visible Power-On Self-Test (POST) routine is the memory test. As the memory is being tested, press the <Delete> key to enter the main menu of the AMI BIOS setup utility. From the main menu, you can access the other setup screens. An AMI BIOS identification string is displayed at the left bottom corner of the screen below the copyright message.

Warning: Do not upgrade the BIOS unless your system has a BIOS-related issue. Flashing the wrong BIOS can cause irreparable damage to the system. In no event shall the manufacturer be liable for direct, indirect, special, incidental, or consequential damage arising from a BIOS update. If you have to update the BIOS, do not shut down or reset the system while the BIOS is being updated to avoid possible boot failure.

7-1 Main Setup

When you first enter the AMI BIOS setup utility, you will enter the Main setup screen. You can always return to the Main setup screen by selecting the Main tab on the top of the screen. The Main BIOS Setup screen is shown below.

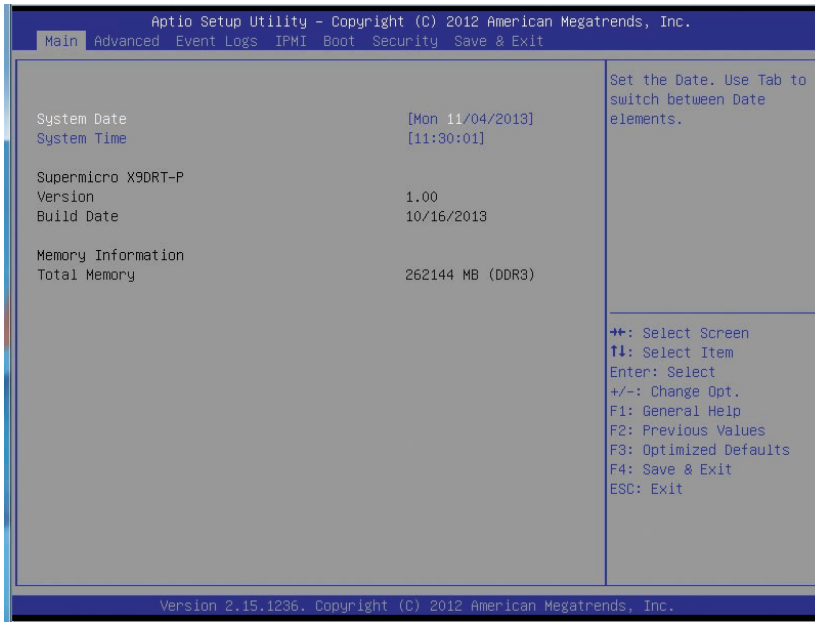

The AMI BIOS Main menu displays the following information:

System Date/System Time

Use this option to change the system date and time Highlight *System Date* or *System Time* using the arrow keys. Enter new values through the keyboard and press <Enter>. Press the <Tab> key to move between fields. The date must be entered in Day MM/DD/YY format. The time is entered in HH:MM:SS format. (**Note:** The time is in the 24-hour format. For example, 5:30 P.M. appears as 17:30:00.).

Supermicro X9DRT-P/-PT/-PIBQ/-PIBF

VersionThis item displays the SMC version of the BIOS ROM used in this system.

Build Date

This item displays the date that the BIOS Setup utility was built.

Memory Information

Total Memory

This displays the amount of memory that is available in the system.

7-2 Advanced Setup Configurations

Select the Advanced tab to access the following submenu items.

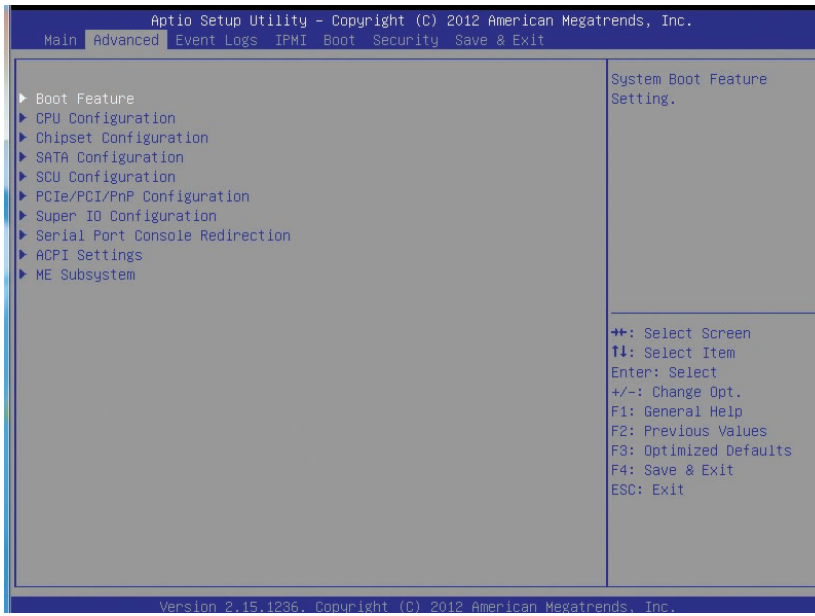

▶Boot Features

Quiet Boot

Use this feature to select bootup screen display between POST messages and the OEM logo. Select Disabled to display the POST messages. Select Enabled to display the OEM logo instead of the normal POST messages. The options are **Enabled** and Disabled.

AddOn ROM Display Mode

Use this feature to set the display mode for the Option ROM. Select Keep Current to use the current AddOn ROM Display setting. Select Force BIOS to use the Option ROM display mode set by the system BIOS. The options are **Force BIOS** and Keep Current.

Bootup Num-Lock

Use this feature to set the power-on state for the Numlock key. The options are Off and **On**.

Wait For 'F1' If Error

Select Enabled to force the system to wait until the 'F1' key is pressed when an error occurs. The options are Disabled and **Enabled**.

Interrupt 19 Capture

Interrupt 19 is the software interrupt that handles the boot disk function. When this item is set to Enabled, the BIOS ROM of the host adaptors will "capture" Interrupt 19 at bootup and allow the drives that are attached to these host adaptors to function as bootable disks. If this item is set to Disabled, the BIOS ROM of the host adaptors will not capture Interrupt 19, and the drives attached to these adaptors will not function as bootable devices. The options are **Enabled** and Disabled.

Re-try Boot

If this feature is set to Enabled, the BIOS will continuously try to boot from the selected boot drive. The options are **Disabled**, Legacy Boot, and EFI Boot.

Power Configuration

Watch Dog Function

If enabled, the Watch Dog timer will allow the system to automatically reboot when a non-recoverable error, which lasts for more than five minutes, occurs. The options are Enabled and **Disabled.**

Power Button Function

If this feature is set to Instant Off, the system will power off immediately as soon as the user presses the power button. If this feature is set to 4 Seconds Override, the system will power off when the user presses the power button for 4 seconds or longer. The options are **Instant Off** and 4 Seconds Override.

Restore on AC Power Loss

Use this feature to set the power state after a power outage. Select Stay Off for the system power to remain off after a power loss. Select Power On for the system power to be turned on after a power loss. Select Last State to allow the system to resume its last state before a power loss. The options are Power On, Stay Off, and **Last State**.

▶CPU Configuration

This submenu displays the following information of the CPU as detected by the BIOS. It also allows the user to configure CPU settings.

▶Socket 1 CPU Information, Socket 2 CPU Information

This submenu displays the following information regarding the CPUs installed in Socket 1 and Socket 2.

- Type of CPU
- CPU Signature
- Microcode Patch
- CPU Stepping
- Maximum CPU Speed
- Minimum CPU Speed
- Processor Cores
- Intel HT (Hyper-Threading) Technology
- Intel VT-x Technology
- Intel SMX Technology
- L1 Data Cache
- L1 Code Cache
- L2 Cache
- L3 Cache

CPU Speed

This item displays the speed of the CPU installed in Socket 1 or Socket 2.

64-bit

This item indicates if the CPU installed in Socket 1 or Socket 2 supports the 64-bit technology.

Clock Spread Spectrum

Select Enable to enable Clock Spectrum support, which will allow the BIOS to monitor and attempt to reduce the level of Electromagnetic Interference caused by the components whenever needed. The options are **Disabled** and Enabled.

RTID (Record Types IDs)

This feature displays the total number of Record Type IDs for local and remote pools. The options are **Optimal** and Alternate.

Hyper-threading

Select Enabled to support Intel's Hyper-threading Technology to enhance CPU performance. The options are **Enabled** and Disabled.

Active Processor Cores

Set to Enabled to use a processor's second core and above. (Please refer to Intel's website for more information.) The options are **All,** 1, 2, 3, 4, 5, 6, 7, 8, 9, 10, and 11.

Limit CPUID Maximum

Use this feature to set the maximum CPU ID value. Enable this feature to boot the legacy operating system that cannot support processors with extended CPUID functions. The options are Enabled and **Disabled** (for the Windows OS).

Execute-Disable Bit (Available if supported by the OS & the CPU)

Select Enabled to enable the Execute Disable Bit which will allow the processor to designate areas in the system memory where an application code can execute and where it cannot, thus preventing a worm or a virus from flooding illegal codes to overwhelm the processor or damage the system during an attack. The default is **Enabled**. (Refer to Intel and Microsoft Web sites for more information.)

Intel® AES-NI

Select Enable to use the Intel Advanced Encryption Standard (AES) New Instructions (NI) to ensure data security. The options are **Enabled** and Disabled.

MLC Streamer Prefetcher (Available when supported by the CPU)

If set to Enabled, the MLC (mid-level cache) streamer prefetcher will prefetch streams of data and instructions from the main memory to the L2 cache to improve CPU performance. The options are Disabled and **Enabled**.

MLC Spatial Prefetcher (Available when supported by the CPU)

If this feature is set to Disabled, The CPU prefetches the cache line for 64 bytes. If this feature is set to Enabled the CPU fetches both cache lines for 128 bytes as comprised. The options are Disabled and **Enabled**.

DCU Streamer Prefetcher (Available when supported by the CPU)

Select Enabled to support Data Cache Unit (DCU) prefetch of L1 data to speed up data accessing and processing in the DCU to enhance CPU performance. The options are Disabled and **Enabled**.

DCU IP Prefetcher

Select Enabled for DCU (Data Cache Unit) IP Prefetcher support, which will prefetch IP addresses to improve network connectivity and system performance. The options are **Enabled** and Disabled.

Intel® Virtualization Technology (Available when supported by the CPU)

Select Enabled to support Intel Virtualization Technology, which will allow one platform to run multiple operating systems and applications in independent partitions, creating multiple "virtual" systems in one physical computer. The options are **Enabled** and Disabled.

> **Note**: If there is any change to this setting, you will need to power off and restart the system for the change to take effect. Please refer to Intel's website for detailed information.)

PPIN Support (Available when supported by the CPU)

Select Enabled for Protected_Processor_Inventory_Number (PPIN) support, which will allow the BIOS setup returns a 64-bit ID number via the PPIN MSR (Magnetic Stripe Reader.) The options are **Enabled** and Disabled.

▶CPU Power Management Configuration

This submenu allows the user to configure the following CPU Power Management settings.

Power Technology

Select Energy Efficient to support power-saving mode. Select Custom to customize system power settings. Select Max Performance to optimize system performance. Select Disabled to disable power-saving settings. The options are Disabled, **Energy Efficient**, Custom, and Max Performance. If the option is set to Custom, the following items will display:

EIST (Available when Power Technology is set to Custom)

EIST (Enhanced Intel SpeedStep Technology) allows the system to automatically adjust processor voltage and core frequency to reduce power consumption and heat dissipation. The options are Disabled and **Enabled**.

Turbo Mode (Available when Power Technology is set to Custom)

Select Enabled to use the Turbo Mode to boost system performance. The options are **Enabled** and Disabled.

C1E (Available when Power Technology is set to Custom)

Select Enabled to enable Enhanced C1 Power State to boost system performance. The options are **Enabled** and Disabled.

CPU C3 Report (Available when Power Technology is set to Custom)

Select Enabled to allow the BIOS to report the CPU C3 State (ACPI C2) to the operating system. During the CPU C3 State, the CPU clock generator is turned off. The options are Enabled and **Disabled.**

CPU C6 Report (Available when Power Technology is set to Custom)

Select Enabled to allow the BIOS to report the CPU C6 State (ACPI C3) to the operating system. During the CPU C6 State, the power to all cache is turned off. The options are **Enabled** and Disabled.

Package C State limit (Available when Power Technology is set to Custom)

This feature allows the user to set the limit on the C-State package register. The options are C0, C2, **C6,** and No Limit.

Energy/Performance Bias

Use this feature to select an appropriate fan setting to achieve maximum system performance (with maximum cooling) or maximum energy efficiency with maximum power saving). The fan speeds are controlled by the firmware management via IPMI 2.0. The options are Performance, **Balanced Performance**, Balanced Energy, and Energy Efficient.

Factory Long Duration Power Limit

This item displays the power limit (in watts) set by the manufacturer during which long duration power is maintained.

Long Duration Power Limit

This item displays the power limit (in watts) set by the user during which long duration power is maintained. The default setting is 0.

Factory Long Duration Maintained

This item displays the period of time (in seconds) set by the manufacturer during which long duration power is maintained.

Long Duration Maintained

This item displays the period of time (in seconds) during which long duration power is maintained. The default setting is 0.

Recommended Short Duration Power Limit

This item displays the short duration power settings (in watts) recommended by the manufacturer.

Short Duration Power Limit

This item displays the time period during which short duration power (in watts) is maintained. The default setting is 0.

▶Chipset Configuration

▶North Bridge

This feature allows the user to configure the settings for the Intel North Bridge.

▶Integrated IO Configuration

Intel® VT-d

Select Enabled to enable Intel Virtualization Technology support for Direct I/O VT-d by reporting the I/O device assignments to the VMM (Virtual Machine Monitor) through the DMAR ACPI Tables. This feature offers fully-protected I/O resource sharing across Intel platforms, providing greater reliability, security and availability in networking and data-sharing. The options are **Enabled** and Disabled.

Ageing Timer Rollover

Use this feature to configure the Ageing timer setting. Use the default setting to comply with the BIOS setting. The options are Disabled, 32 us, **128 us**, and 512 us.

Intel® I/OAT

Select Enabled to enable Intel I/OAT (I/O Acceleration Technology), which significantly reduces CPU overhead by leveraging CPU architectural improvements and freeing the system resource for other tasks. The options are Disabled and **Enabled**.

DCA Support

When set to Enabled, this feature uses Intel's DCA (Direct Cache Access) Technology to improve data transfer efficiency. The default setting is **Enabled**.

IIO 1 PCIe Port Bifurcation Control

This submenu configures the following IO PCIe Port Bifurcation Control settings for IIO 1 PCIe ports to determine how the available PCI-Express lanes to be distributed between the PCI-Exp. Root Ports.

CPU1 Slot1 PCI-E Link Speed

Select GEN1 to enable PCI-Exp Generation 1 support for the port specified. Select GEN2 to enable PCI-Exp Generation 2 support for the port specified. Select GEN3 to enable PCI-Exp Generation 3 support for the port specified. The options are GEN1, GEN2, and **GEN3**.

CPU1 Slot2 PCI-E Link Speed

Select GEN1 to enable PCI-Exp Generation 1 support for the port specified. Select GEN2 to enable PCI-Exp Generation 2 support for the port specified. Select GEN3 to enable PCI-Exp Generation 3 support for the port specified. The options are GEN1, GEN2, and **GEN3**.

IIO 2 PCIe Port Bifurcation Control

This submenu configures the following IO PCIe Port Bifurcation Control settings for IIO 2 PCIe ports to determine how the available PCI-Express lanes to be distributed between the PCI-Exp. Root Ports.

▶QPI Configuration

Current QPI Link Speed

This item displays the current status of the QPI Link.

Current QPI Link Frequency

This item displays the frequency of the QPI Link.

Isoc

Select Enabled to enable Isochronous support to meet QoS (Quality of Service) requirements. This feature is especially important for virtualization technology. The options are Enabled and **Disabled**.

MesegEn

Select Enabled to allow the BIOS to send and to receive messages regarding QPI links. The options are Enabled and **Disabled**.

QPI (Quick Path Interconnect) Link Speed Mode

Use this feature to select data transfer speed for QPI Link connections. The options are **Fast** and Slow.

QPI Link Frequency Select

Use this feature to select the desired QPI frequency. The options are **Auto**, 6.4 GT/s, 7.2 GT/s, and 8.0 GT/s.

Snoop Mode

Use this feature to select the snoop mode. The options are **Auto**, Early Snoop, Home Snoop, Home Directory Snoop, and Home Directory Snoop with OSB.

▶DIMM Configuration

This section displays the following DIMM information.

Current Memory Mode

This item displays the current memory mode.

Current Memory Speed

This item displays the current memory speed.

Mirroring

This item displays if memory mirroring is supported by the serverboard. Memory mirroring creates a duplicate copy of the data stored in the memory to enhance data security.

Sparing

This item displays if memory sparing is supported by the serverboard. Memory sparing enhances system performance.

▶DIMM Information

The status of the memory modules detected by the BIOS is displayed.

CPU Socket 1 DIMM Information

P1-DIMMA1/P1-DIMMA2/P1-DIMMB1/P1-DIMMB2/P1-DIMMC1/P1-DIMMC2/P1-DIMMD1/P1-DIMMD2

CPU Socket 2 DIMM Information

P2-DIMME1/P2-DIMME2/P2-DIMMF1/P2-DIMMF2/P2-DIMMG1/P2-DIMMG2/P2-DIMMH1/P2-DIMMH2

Memory Mode

When Independent is selected, all DIMMs are available to the operating system. When Mirroring is selected, the serverboard maintains two identical copies of all data in memory for data backup. When Lock Step is selected, the serverboard uses two areas of memory to run the same set of operations in parallel. The settings are **Independent**, Mirroring, Lock Step, and Sparing.

DRAM RAPL Mode

RAPL (Running Average Power Limit) provides mechanisms to enforce power consumption limits on supported processors. The options are DRAM RAPL MODE0 , **DRAM RAPL MODE1**, and Disabled.

DDR Speed

Use this feature to force a DDR3 memory module to run at a frequency other than what is specified in the specification. The options are **Auto**, Force DDR3-800, Force DDR3-1066, Force DDR3-1333, Force DDR3-1600 and Force SPD.

Channel Interleaving

Use this feature to set the DIMM channel interleaving mood. The options are **Auto**, 1 Way, 2 Way, 3, Way, and 4 Way.

Rank Interleaving

This feature allows the user to select a rank memory interleaving method. The options are **Auto**, 1 Way, 2 Way, 4, Way, and 8 Way.

Patrol Scrub

Patrol Scrubbing is a process that allows the CPU to correct correctable memory errors detected on a memory module and send the correction to the requestor (the original source). When this item is set to Enabled, the IO hub will read and write back one cache line every 16K cycles, if there is no delay caused by internal processing. By using this method, roughly 64 GB of memory behind the IO hub will be scrubbed every day. The options are **Enabled** and Disabled.

Demand Scrub

Demand Scrubbing is a process that allows the CPU to correct correctable memory errors found on a memory module. When the CPU or I/O issues a demand-read command, and the read data from memory turns out to be a correctable error, the error is corrected and sent to the requestor (the original source). Memory is updated as well. Select Enabled to use Demand Scrubbing for ECC memory correction. The options are **Enabled** and Disabled.

Data Scrambling

Select Enabled to enable data scrambling to ensure data security and integrity. The options are Disabled and **Enabled**.

Device Tagging

Select Enabled to support device tagging. The options are **Disabled** and Enabled.

Thermal Throttling

Throttling improves reliability and reduces power consumption in the processor via automatic voltage control during processor idle states. The options are Disabled and **CLTT** (Closed Loop Thermal Throttling).

Double Refresh

Select Enabled to support double refresh for onboard memory to enhance memory and system performance. The options are **Auto**, Enabled, and Disabled.

▶South Bridge Configuration

This feature allows the user to configure the settings for the Intel PCH chip.

PCH Information

This feature displays the following PCH information.

Name: This item displays the name of the PCH chip.

Stepping: This item displays the status of the PCH stepping.

USB Devices: This item displays the USB devices detected by the BIOS.

All USB Devices

Select Enabled to enable USB port/device support. The options are Disabled and **Enabled**.

EHCI Controller 1/EHCI Controller 2 (Available when All USB Devices is set to Enabled)

Select Enabled to enable EHCI (Enhanced Host Controller Interface) Controller 1 or Controller 2. The options are Disabled and **Enabled**.

Legacy USB Support (Available when USB Functions is not Disabled)

Select Enabled to support legacy USB devices. Select Auto to disable legacy support if USB devices are not present. Select Disabled to have USB devices available for EFI (Extensive Firmware Interface) applications only. The settings are Disabled, **Enabled** and Auto.

Port 60/64 Emulation

Select Enabled to enable I/O port 60h/64h emulation support for the legacy USB keyboard so that it can be fully supported by the operating systems that does not recognize a USB device. The options are Disabled and **Enabled**.

EHCI Hand-Off

This item is for operating systems that do not support Enhanced Host Controller Interface (EHCI) hand-off. When this feature is set to Enabled, EHCI ownership change will be claimed by the EHCI driver. The options are **Disabled** and Enabled.

▶SATA Configuration

When this submenu is selected, the AMI BIOS automatically detects the presence of the SATA Devices and displays the following items:

SATA Controllers

This item Enables or Disables the built-in SATA controllers on the serverboard. The options are **Enabled** and Disabled.

SATA Mode Selection

This item selects the mode for the installed SATA drives. The options are IDE, **AHCI** and RAID.

SATA RAID Option ROM/UEFI Driver (Available if the item above - SATA Mode Select is set to AHCI or RAID)

Select Enabled to use the SATA RAID Option ROM/UEFI driver for system boot. The options are **Enabled** and Disabled.

If the item above -SATA Mode Select is set to AHCI, the following items are displayed:

Serial ATA Port 0~ Port 5

This item displays the information detected on the installed SATA drives on the particular SATA port.

- Model number of drive and capacity
- Software Preserve Support

Port 0 ~ Port 5 Hot Plug

This feature designates the port specified for hot plugging. Set this item to Enabled for hot-plugging support, which will allow the user to replace a SATA disk drive without shutting down the system. The options are **Enabled** and Disabled.

Port 0 ~ Port 5 SATA Device Type

This feature configures the selected SATA port to support either a solid state drive or hard disk drive. The options are **Hard Disk Drive** and Solid Sate Drive.

Port 0 ~ Port 5 Spin Up Device

On an edge detect from 0 to 1, set this item to allow the PCH to start a COMRESET initialization sequence to the device. The options are Enabled and **Disabled**.

If the item above - SATA Mode Select is set to IDE, the following items are displayed:

Serial ATA Port 0~ Port 5

This item displays the information detected on the installed SATA drives on the particular SATA port.

- Model number of drive and capacity
- Software Preserve Support

If the item above - SATA Mode Select is set to RAID, the following items are displayed:

Serial ATA Port 0~ Port 5

This item displays the information detected on the installed SATA drives on the particular SATA port.

- Model number of drive and capacity
- Software Preserve Support

Port 0 ~ Port 5 Hot Plug

This feature designates this port for hot plugging. Set this item to Enabled for hot-plugging support, which will allow the user to replace a SATA drive without shutting down the system. The options are **Enabled** and Disabled.

Port 0 ~ Port 5 SATA Device Type

This feature configures the selected SATA port to support either a solid state drive or hard disk drive. Set this item to Enabled to enable hot-plugging. The options are **Hard Disk Drive** and Solid Sate Drive.

Port 0 ~ Port 5 Spin Up Device

On an edge detect from 0 to 1, set this item to allow the PCH to start a COMRESET initialization sequence to the device. The options are Enabled and **Disabled**.

Port 0~5 Staggered Spin Up

Select Enabled to enable Staggered Spin-up support to prevent excessive power consumption caused by multiple HDDs spinning-up simultaneously. The options are Enabled and **Disabled**.

RAID Mode

The following items are displayed when RAID Mode is selected:

PCH RAID CodeBase

Select Intel.to configure RAID settings using the Intel PCH controller. Select LSI to configure RAID settings using the LSI controller. The options are **Intel** and LSI.

SATA RAID Option ROM/UEFI Driver (Available if the item above - SATA Mode Select is set to AHCI or RAID)

Select Enabled to use the SATA RAID Option ROM/UEFI driver for system boot. The options are **Enabled** and Disabled.

Port 0~5 Hot Plug

Select Enabled to enable hot-plug support for the particular port. The options are **Enabled** and Disabled.

▶SCU (System Configuration Unit) Configuration

Storage Control Unit

Select Enabled to support Intel PCH devices. The options are Disabled and **Enabled**.

SATA RAID Option ROM/UEFI Driver

Select Enabled to use the SATA RAID Option ROM/UEFI driver for system boot. The options are **Enabled** and Disabled.

SCU Devices

Select Enabled to enable support for PCH SCU (System Configuration Utility) devices. The options are Disabled and **Enabled**.

SCU Ports 0~3

The status of each of the SCU ports indicated above will be displayed.

▶PCIe/PCI/PnP Configuration

Launch Storage OPROM Policy

This feature controls how the system executes UEFI (Unified Extensible Firmware Interface), and legacy storage OPROM. Select Legacy Only to boot the system using a legacy device installed in a PCI slot. The options are UEFI Only and **Legacy Only**.

PCI Latency Timer

Use this feature to set the latency Timer of each PCI device installed on a PCI bus. Select 64 to set the PCI latency to 64 PCI clock cycles. The options are 32, **64**, 96, 128, 160, 192, 224 and 248 (PCI Bus Clocks).

PERR# Generation

Select Enabled to allow a PCI device to generate a PERR number for a PCI Bus Signal Error Event. The options are Enabled and **Disabled**.

SERR# Generation

Select Enabled to allow a PCI device to generate an SERR number for a PCI Bus Signal Error Event. The options are Enabled and **Disabled**.

Maximum Payload

Select Auto to allow the system BIOS to automatically set the maximum payload value for a PCI-E device to enhance system performance. The options are **Auto**, 128 Bytes and 256 Bytes.

Maximum Read Request

Select Auto to allow the system BIOS to automatically set the maximum Read Request size for a PCI-E device to enhance system performance. The options are **Auto**, 128 Bytes, 256 Bytes, 512 Bytes, 1024 Bytes, 2048 Bytes, and 4096 Bytes.

ASPM Support

This feature allows the user to set the Active State Power Management (ASPM) level for a PCI-E device. Select Force L0s to force all PCI-E links to operate at L0s state. Select Auto to allow the system BIOS to automatically set the ASPM level for the system. Select Disabled to disable ASPM support. The options are **Disabled**, Force L0s, and Auto.

Warning: Enabling ASPM support may cause some PCI-E devices to fail!

Above 4G Decoding (Available if the system supports 64-bit PCI decoding)

Select Enabled to decode a PCI device that supports 64-bit in the space above 4G Address. The options are Enabled and **Disabled**.

CPU1 Slot 1 PCI-E 3.0 x16 OPROM/ CPU1 Slot 2 PCI-E 3.0 x8 OPROM

Select Enabled to enable Option ROM support to boot the computer using a device installed on the slot specified above. The options are **Enabled** and Disabled.

Onboard LAN Option ROM Select

Select iSCSI to use the iSCSI Option ROM to boot the computer using a network device. Select PXE (Preboot Execution Environment) to use an PXE Option ROM to boot the computer usin g a network device. The options are iSCSI and **PXE**.

Load Onboard LAN1 Option ROM, Load Onboard LAN2 Option ROM

Select Enabled to enable the onboard LAN1/LAN2 Option ROM. This is to boot the computer using a network device. The default setting for LAN1 Option ROM is **Enabled**, and the default setting for LAN2 Option ROM is **Disabled**.

VGA Priority

This feature allows the user to select the graphics adapter to be used as the primary boot device. The options are **Onboard** and Offboard.

Network Stack

Select Enabled enable PXE (Preboot Execution Environment) or UEFI (Unified Extensible Firmware Interface) for network stack support. The options are Enabled and **Disabled**.

▶Super IO Configuration

Super IO Chip: This item displays the Super IO chip used in the serverboard.

Serial Port Attribute

Use this feature to select the attribute for this serial port. The options are **COM/ SOL** (Serial On LAN), and BMC.

▶COM Configuration

Serial Port

Select Enabled to enable a serial port specified by the user. The options are **Enabled** and Disabled.

Device Settings

This item displays the settings of Serial Port 1 (COM).

Change Settings

This option specifies the base I/O port address and the Interrupt Request address of Serial Port 1 (COM). Select Disabled to prevent the serial port from accessing any system resources. When this option is set to Disabled, the serial port becomes unavailable. The options are **Auto**, IO=3F8h; IRQ=4; IO=3F8h; IRQ=3; IO=2F8h; IRQ=3; IO=3E8h; IRQ=5; IO=2E8h; IRQ=7; IO=3F8h; IRQ=3, 4, 5, 6, 7, 10, 11, 12; IO=2F8h; IRQ=3, 4, 5, 6, 7, 10, 11, 12; IO=3E8h; IRQ=3, 4, 5, 6, 7, 10, 11, 12; and IO=2E8h; IRQ=3, 4, 5, 6, 7, 10, 11, 12;

Device Mode

Use this feature to select the desired mode for a serial port specified. The options are **Normal** and High Speed.

▶SOL (Serial_Over_LAN) Configuration

SOL Serial Port

Select Enabled to enable a serial port specified by the user. The options are **Enabled** and Disabled.

Device Settings

This item displays the settings of Serial Port 2 (SOL).

Change Settings

This option specifies the base I/O port address and the Interrupt Request address of Serial Port 2 (SOL). Select Disabled to prevent the serial port from accessing any system resources. When this option is set to Disabled, the serial port becomes unavailable. The options are **Auto**, IO=3F8h; IRQ=4; IO=3F8h; IRQ=3; IO=2F8h; IRQ=3; IO=3E8h; IRQ=5; IO=2E8h; IRQ=7; IO=3F8h; IRQ=3, 4, 5, 6, 7, 10, 11, 12; IO=2F8h; IRQ=3, 4, 5, 6, 7, 10, 11, 12; IO=3E8h; IRQ=3, 4, 5, 6, 7, 10, 11, 12; and IO=2E8h; IRQ=3, 4, 5, 6, 7, 10, 11, 12;

SOL Device Mode

Use this feature to select the desired mode for a serial port specified. The options are **Normal** and High Speed.

▶Serial Port Console Redirection

COM

This submenu allows the user to configure the following Console Redirection settings for this Port.

Console Redirection

Select Enabled to use the SOL Port for Console Redirection. The options are Enabled and **Disabled**.

SOL

This submenu allows the user to configure the following Console Redirection settings for the SOL Port specified by the user.

Console Redirection

Select Enabled to use the SOL Port for Console Redirection. The options are **Enabled** and Disabled.

▶Console Redirection Settings

This feature allows the user to specify how the host computer will exchange data with the client computer, which is the remote computer used by the user.

Terminal Type

This feature allows the user to select the target terminal emulation type for Console Redirection. Select VT100 to use the ASCII Character set. Select VT100+ to add color and function key support. Select ANSI to use the Extended ASCII Character Set. Select VT-UTF8 to use UTF8 encoding to map Unicode characters into one or more bytes. The options are ANSI, VT100, **VT100+**, and VT-UTF8.

Bits Per second

Use this feature to set the transmission speed for a serial port used in Console Redirection. Make sure that the same speed is used in the host computer and the client computer. A lower transmission speed may be required for long and busy lines. The options are 9600, 19200, 38400, 57600 and **115200** (bits per second).

Data Bits

Use this feature to set the data transmission size for Console Redirection. The options are 7 Bits and **8 Bits**.

Parity

A parity bit can be sent along with regular data bits to detect data transmission errors. Select Even if the parity bit is set to 0, and the number of 1's in data bits is even. Select Odd if the parity bit is set to 0, and the number of 1's in data bits is odd. Select None if you do not want to send a parity bit with your data bits in transmission. Select Mark to add a mark as a parity bit to be sent along with the data bits. Select Space to add a Space as a parity bit to be sent with your data bits. The options are **None**, Even, Odd, Mark and Space.

Stop Bits

A stop bit indicates the end of a serial data packet. Select 1 Stop Bit for standard serial data communication. Select 2 Stop Bits if slower devices are used. The options are **1** and 2.

Flow Control

This feature allows the user to set the flow control for Console Redirection to prevent data loss caused by buffer overflow. Send a "Stop" signal to stop sending data when the receiving buffer is full. Send a "Start" signal to start sending data when the receiving buffer is empty. The options are **None** and Hardware RTS/CTS.

VT-UTF8 Combo Key Support

Select Enabled to enable VT-UTF8 Combination Key support for ANSI/VT100 terminals. The options are **Enabled** and Disabled**.**

Recorder Mode

Select Enabled to capture the data displayed on a terminal and send it as text messages to a remote server. The options are **Disabled** and Enabled.

Resolution 100x31

Select Enabled for extended-terminal resolution support. The options are Disabled and **Enabled**.

Legacy OS Redirection Resolution

Use this feature to select the number of rows and columns used in Console Redirection for legacy OS support. The options are 80x24 and **80x25**.

Putty KeyPad

This feature selects Function Keys and KeyPad settings for Putty, which is a terminal emulator designed for the Windows OS. The options are **VT100**, LINUX, XTERMR6, SCO, ESCN, and VT400.

Redirection After BIOS Post

Use this feature to enable or disable legacy console redirection after BIOS POST. When set to Bootloader, legacy console redirection is disabled before booting the OS. When set to Always Enable, legacy console redirection remains enabled when booting the OS. The options are **Always Enable** and Bootloader.

Serial Port for Out-of-Band Management/Windows Emergency Management Services (EMS)

The submenu allows the user to configure Console Redirection settings to support Out-of-Band Serial Port management.

Console Redirection (for EMS)

Select Enabled to use a COM Port selected by the user for Console Redirection. The options are Enabled and **Disabled**.

▶Console Redirection Settings (for EMS)

This feature allows the user to specify how the host computer will exchange data with the client computer, which is the remote computer used by the user.

Out-of-Band Management Port

The feature selects a serial port used by the Microsoft Windows Emergency Management Services (EMS) to communicate with a remote server. The options are **COM** and SOL.

Terminal Type

This feature allows the user to select the target terminal emulation type for Console Redirection. Select VT100 to use the ASCII character set. Select VT100+ to add color and function key support. Select ANSI to use the extended ASCII character set. Select VT-UTF8 to use UTF8 encoding to map Unicode characters into one or more bytes. The options are ANSI, VT100, **VT100+**, and VT-UTF8.

Bits Per Second

This item sets the transmission speed for a serial port used in Console Redirection. Make sure that the same speed is used in the host computer and the client computer. A lower transmission speed may be required for long and busy lines. The options are 9600, 19200, 57600, and **115200** (bits per second).

Flow Control

This feature allows the user to set the flow control for Console Redirection to prevent data loss caused by buffer overflow. Send a "Stop" signal to stop sending data when the receiving buffer is full. Send a "Start" signal to start sending data when the receiving buffer is empty. The options are **None,** Hardware RTS/CTS, and Software Xon/Xoff.

Data Bits, Parity, Stop Bits

The setting for each these features is displayed.

▶ACPI Settings

Use this feature to configure Advanced Configuration and Power Interface (ACPI) power management settings for your system.

ACPI Sleep State

Use this feature to select the ACPI State when the system is in sleep mode. Select S1 (CPU Stop Clock) to erase all CPU caches and stop executing instructions. Power to the CPU(s) and RAM is maintained, but RAM is refreshed. Select Suspend Disabled to use power-reduced mode. Power will only be supplied to limited components (such as RAMs) to maintain the most critical functions of the system. The options are **S1 (CPU Stop Clock)** and Suspend Disabled.

NUMA (NON-Uniform Memory Access)

This feature enables the Non-Uniform Memory Access ACPI support. The options are **Enabled** and Disabled.

High Precision Event Timer

Select Enabled to activate the High Precision Event Timer (HPET) that produces periodic interrupts at a much higher frequency than a Real-time Clock (RTC) does in synchronizing multimedia streams, providing smooth playback, reducing the dependency on other timestamp calculation devices, such as an x86 RDTSC Instruction embedded in the CPU. The High Performance Event Timer is used to replace the 8254 Programmable Interval Timer. The options are **Enabled** and Disabled.

▶Trusted Computing (Available when a TPM device is detected by the BIOS)

Configuration

TPM Support

Select Enabled on this item and enable the TPM jumper on the serverboard to enable TPM support to improve data integrity and network security. The options are **Enabled** and Disabled.

TPM State

Select Enabled to enable TPM security settings to improve data integrity and network security. The options are Disabled and **Enabled**.

Pending Operation

Use this item to schedule an operation for the security device. The options are **None**, Enable Take Ownership, Disable Take Ownership, and TPM Clear.

> **Note:** During restart, the computer will reboot in order to execute the pending operation and change the state of the security device.

Current Status Information: This item displays the information regarding the current TPM status.

TPM Enable Status

This item displays the status of TPM Support to indicate if TPM is currently enabled or disabled.

TPM Active Status

This item displays the status of TPM Support to indicate if TPM is currently active or deactivated.

TPM Owner Status

This item displays the status of TPM Ownership.

▶Intel TXT (LT-SX) Configuration

Intel TXT (LT-SX) Hardware Support

This feature indicates if the following hardware components support the Intel Trusted Execution Technology.

CPU: TXT (Trusted Execution Technology) Feature

Chipset: TXT (Trusted Execution Technology) Feature

Intel TXT (LT-SX) Configuration

This feature displays the following TXT configuration setting.

TXT (LT-SX) Support: This item indicates if the Intel TXT support is enabled or disabled. The default setting is **Disabled**.

Intel TXT (LT-SX) Dependencies

This feature displays the features that need to be enabled for the Intel Trusted Execution Technology to work properly in the system.

VT-d Support: Intel Virtualization Technology with Direct I/O support

VT Support: Intel Virtualization Technology support

TPM Support: Trusted Platform support

TPM State: Trusted Platform state

▶ME Subsystem

This feature displays the following ME Subsystem Configuration settings.

- **ME BIOS Interface Version**
- **ME Version**

iSCSI Configuration

This item displays iSCSI configuration information:

iSCSI Initiator Name

This item displays the name of the iSCSI Initiator, which is a unique name used in the world. The name must use IQN format. The following actions can also be performed:

- Add an Attempt
- Delete Attempts

  - Commit Changes and Exit
  - Discard Changes and Exit
- Change Attempt Order
  - Commit Changes and Exit
  - Discard Changes and Exit

Intel® I350 Gigabit Network Connections

These items display the following information on the Intel I350 LAN connections.

▶NIC Configuration

Link Speed

Use this feature to change the link speed and duplex for the current port. The options are **AutoNeg**, 10Mbps Half, 10Mbps Full, 100Mbps Half, and 100Mbps full.

Wake on LAN

Select enabled to wake the system with a magic packet. The options are **Enabled** and Disabled.

Blink LEDs

This feature allows the user to specify the duration for LEDs to blink. The range is from 0 ~ 15 seconds. The default setting is **0**.

PORT CONFIGURATION INFORMATION

This section displays the following port information:

- UEFI Driver
- Adapter PBA
- Chip Type
- PCI Device ID
- PCI Bus:Device:Function
- Link Status
- Factory MAC Address
- Alternate MAC Address

7-3 Event Logs

Select the Event Logs tab to access the following submenu items.

▶Change SMBIOS Event Log Settings

This feature allows the user to configure SMBIOS Event settings.

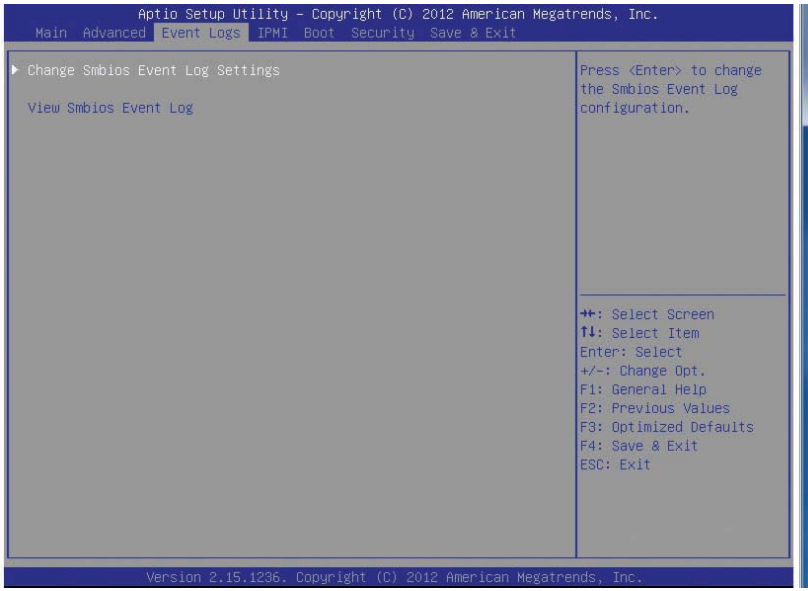

Enabling/Disabling Options

SMBIOS Event Log

Select Enabled to enable SMBIOS (System Management BIOS) Event Logging during system boot. The options are **Enabled** and Disabled.

Runtime Error Logging Support

Select Enabled to support Runtime Error Logging. The options are **Enabled** and Disabled.

Memory Correctable Error Threshold

This feature allows the user to enter the threshold value for correctable memory errors. The default setting is **10**.

PCI Error Logging Support

Select Enabled to support error event logging for PCI slots. The options are Enabled and **Disabled**.

Erasing Settings

Erase Event Log

Select Enabled to erase the SMBIOS (System Management BIOS) Event Log, which is completed before a event logging is initialized upon system reboot. The options are **No**, Yes, Next reset, and Yes, Every reset.

When Log is Full

Select Erase Immediately to immediately erase SMBIOS error event logs that exceed the limit when the SMBIOS event log is full. Select Do Nothing for the system to do nothing when the SMBIOS event log is full. The options are **Do Nothing** and Erase Immediately.

SMBIOS Event Log Standard Settings

Log System Boot Event

Select Enabled to log system boot events. The options are **Disabled** and Enabled.

MECI (Multiple Event Count Increment)

Enter the increment value for the multiple event counter. Enter a number from 1 to 255. The default setting is **1**.

METW (Multiple Event Count Time Window)

This item allows the user to decide how long (in minutes) should the multiple event counter wait before generating a new event log. Enter a number from 0 to 99. The default setting is **60**.

7-4 IPMI

Select the IPMI (Intelligent Platform Management Interface) tab to access the following submenu items.

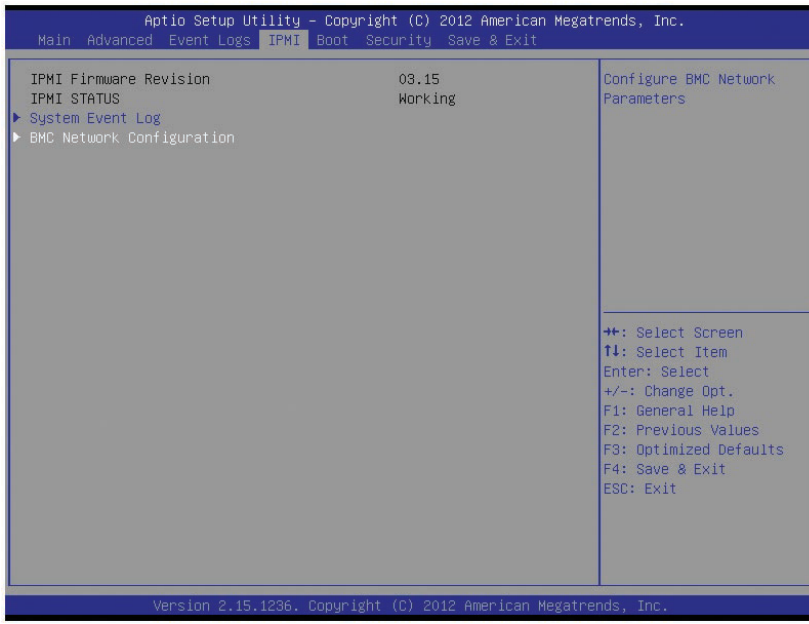

IPMI Firmware Revision, IPMI Status

These items indicates your system IPMI firmware revision number and status.

▶System Event Log

SEL Components

Select Enabled for all system event logging at bootup. The options are **Enabled** and Disabled.

Erasing Settings

Erase SEL

Select Yes, On next reset to erase all system event logs upon next system reboot. Select Yes, On every reset to erase all system event logs upon each system reboot. Select No to keep all system event logs after each system reboot. The options are **No,** Yes, On next reset, and Yes, On every reset.

When SEL is Full

This feature allows the user to decide what the BIOS should do when the system event log is full. Select Erase Immediately to erase all events in the log when the system event log is full. The options are **Do Nothing** and Erase Immediately.

Custom EFI Logging Options

Log EFI Status Codes

Select Enabled to log EFI (Extensible Firmware Interface) Status Codes, Error Codes or Progress Codes. The options are **Enabled** and Disabled.

> **Note**: After making changes on a setting, be sure to reboot the system for the changes to take effect.

▶BMC Network Configuration

LAN Channel 1: This feature allows the user to configure the settings for LAN1 Port.

IPMI LAN Selection

This feature displays the IPMI LAN Selection setting. The default setting is **Failover.**

IPMI Network Link Status

This feature displays the IPMI Network Link status. The default setting is **Dedicated LAN.**

Update IPMI LAN Configuration

This feature allows the BIOS to implement any IP/MAC address changes at the next system boot. If the option is set to Yes, any changes made to the settings below will take effect when the system is rebooted. The options are **No** and Yes.

Configuration Address Source

This feature allows the user to select the source of the IP address for this computer. If Static is selected, you will need to know the IP address of this computer and enter it to the system manually in the field. If DHCP is selected, the BIOS will search for a DHCP (Dynamic Host Configuration Protocol) server in the network that is attached to and request the next available IP address for this computer. The options are **DHCP** and Static. The following items are assigned IP addresses automatically if DHCP is selected, or can be configured manually if Static is selected.

Update IPMI LAN Configuration

This feature allows the BIOS to implement any IP/MAC address changes at the next system boot. If the option is set to Yes, any changes made to the settings below will take effect when the system is rebooted. The options are **No** and Yes.

Station IP Address

This item displays the Station IP address for this computer. This should be in decimal and in dotted quad form (i.e., 192.168.10.253).

Subnet Mask

This item displays the sub-network that this computer belongs to. The value of each three-digit number separated by dots should not exceed 255.

Station MAC Address

This item displays the Station MAC address for this computer. Mac addresses are 6 two-digit hexadecimal numbers.

Gateway IP Address

This item displays the Gateway IP address for this computer. This should be in decimal and in dotted quad form (i.e., 192.168.10.253).

7-5 Boot

This submenu allows the user to configure the following boot settings for the system.

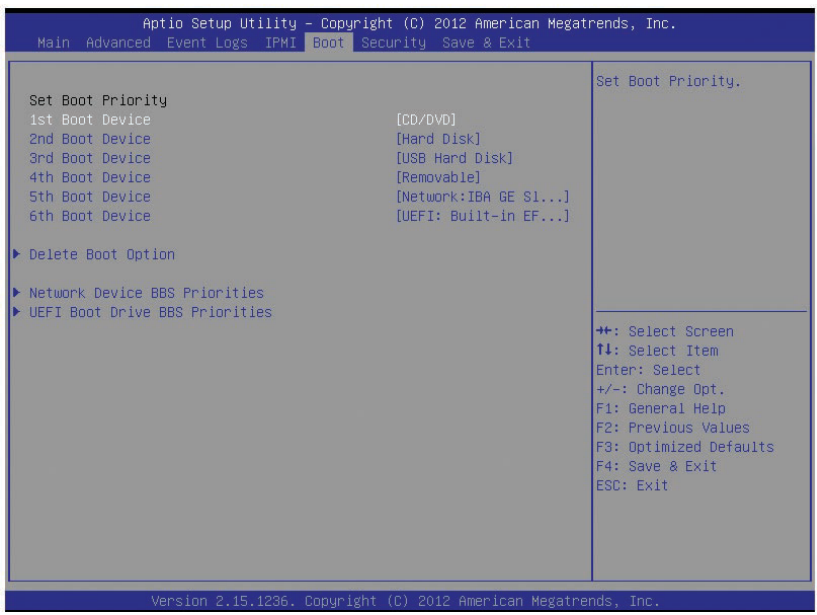

Set Boot Priority

This option prioritizes the order of bootable devices that the system to boot from. Press <ENTER> on each entry from top to bottom to select devices.

- 1st Boot Device
- 2nd Boot Device
- 3rd Boot Device
- 4th Boot Device
- 5th Boot Device
- 6th Boot Device

▶CD/DVD ROM Drive BBS Priorities (Available when a device is installed in this drive)

- 1st Device

▶Hard Disk Drive BBS Priorities (Available when a device is installed in this drive)

- 1st Device
- 2nd Device

▶USB Hard Disk Drive BBS Priorities (Available when a device is installed in this drive)

- 1st Device

▶Network Device BBS Priorities

- 1st Device

▶UEFI Boot Drive BBS Priorities

- 1st Boot Device

▶Add New Boot Option

Use this feature to add a new boot device from which the system will boot during startup.

The settings are [any pre-defined boot device]

▶Delete Boot Option

Use this feature to remove a pre-defined boot device from which the system will boot during startup.

The settings are [any pre-defined boot device]

▶Delete Driver Option

This feature allows the user to delete a previously defined boot device from which the systems boots during startup.

The settings are [any pre defined boot device]

7-6 Security

This menu allows the user to configure the following security settings for the system.

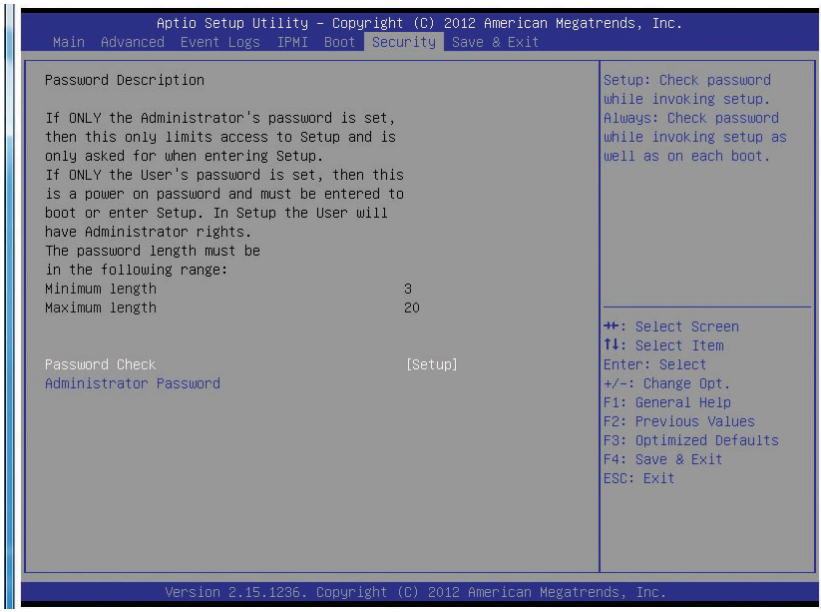

Password Check

Use this feature to determine when a password entry is required. Select Setup to require the password only when entering setup. Select Always to require the password when entering setup and at each bootup. The options are **Setup** and Always.

Administrator Password

Use this feature to set the Administrator Password which is required to enter the BIOS setup utility. The length of the password should be from 3 characters to 20 characters long.

7-7 Save & Exit

This submenu allows the user to configure the Save and Exit settings for the system.

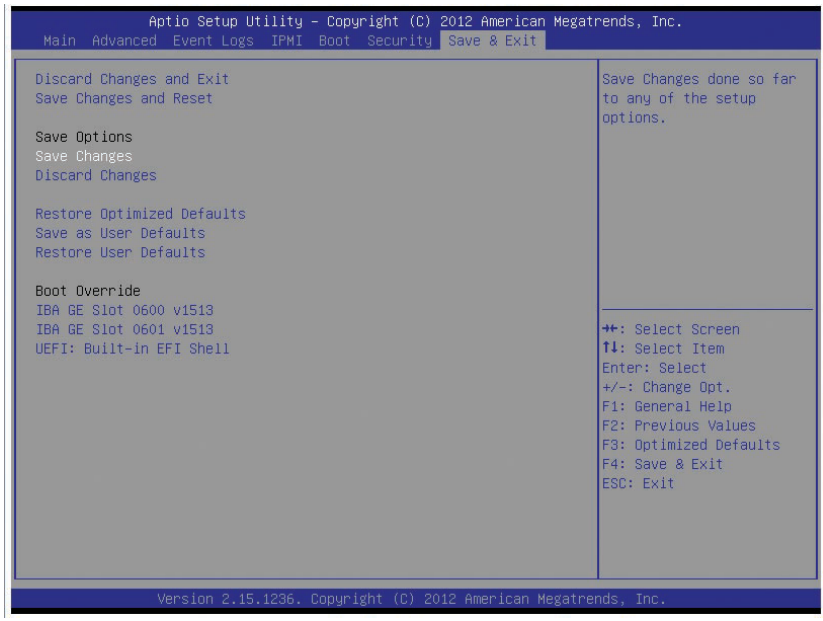

Discard Changes and Exit

Select this option to quit the BIOS Setup without making any permanent changes to the system configuration, and reboot the computer. Select Discard Changes and Exit, and press <Enter>. When the dialog box appears, asking you if you want to exit the BIOS setup without saving, select **Yes** to quit BIOS without saving the changes, or select No to quit the BIOS and save changes.

Save Changes and Reset

When you have completed the system configuration changes, select this option to save the changes and reboot the computer so that the new system configuration settings can take effect. Select Save Changes and Exit, and press <Enter>. When the dialog box appears, asking you if you want to exit the BIOS setup without saving, select **Yes** to quit BIOS without saving the changes, or select No to quit the BIOS and save changes.

Save Options

Save Changes

Select this option and press <Enter> to save all changes you've done so far and return to the AMI BIOS utility Program. When the dialog box appears, asking you if you want to save configuration, select **Yes** to save the changes, or select No to return to the BIOS without making changes.

Discard Changes

Select this feature and press <Enter> to discard all the changes and return to the BIOS setup. When the dialog box appears, asking you if you want to load previous values, select **Yes** to load the values previous saved, or select No to keep the changes you've made so far.

Restore Optimized Defaults

Select this feature and press <Enter> to load the optimized default settings that help optimize system performance. When the dialog box appears, asking you if you want to load optimized defaults, select **Yes** to load the optimized default settings, or select No to abandon optimized defaults.

Save as User Defaults

Select this feature and press <Enter> to save the current settings as the user's defaults. When the dialog box appears, asking you if you want to save values as user's defaults, select **Yes** to save the current values as user's default settings, or select No to keep the defaults previously saved as the user's defaults.

Restore User Defaults

Select this feature and press <Enter> to load the user's defaults previously saved in the system. When the dialog box appears, asking you if you want to restore user's defaults, select **Yes** to restore the user's defaults previously saved in the system, or select No to abandon the user's defaults that were previously saved.

Boot Override

This feature allows the user to override the Boot Option Priorities setting in the Boot menu, and instead immediately boot the system with one of the listed devices. This is a one-time override.

Appendix A

BIOS Error Beep Codes

During the POST (Power-On Self-Test) routines, which are performed each time the system is powered on, errors may occur.

Non-fatal errors are those which, in most cases, allow the system to continue the boot-up process. The error messages normally appear on the screen.

Fatal errors are those which will not allow the system to continue the boot-up procedure. If a fatal error occurs, you should consult with your system manufacturer for possible repairs.

These fatal errors are usually communicated through a series of audible beeps. The numbers on the fatal error list (on the following page) correspond to the number of beeps for the corresponding error. All errors listed, with the exception of Beep Code 8, are fatal errors.

A-1 AMIBIOS Error Beep Codes

Beep Code	Error Message	Description
1 beep	Refresh	Circuits have been reset (Ready to power up)
5 short beeps and 1 long beep	Memory error	No memory detected in the system
5 beeps	No Con-In or No Con-Out devices	Con-In: USB or PS/2 keyboard, PCI or Serial Console Redirection, IPMI KVM or SOL Con-Out: Video Controller, PCI or Serial Console Redirection, IPMI SOL
1 beep per device	Refresh	1 beep for each USB device
X9 IPMI Error Codes		
1 continuous beep	System overheat	System overheat

Notes

Appendix B

System Specifications

Note: Unless noted specifications apply to a complete system (all serverboards).

Processors

Two E5-2600 (V2) series processors per node in Socket R LGA 2011 type sockets

Note: please refer to our website for details on supported processors.

Chipset

One C602 chipset per node

BIOS

16 Mb AMI BIOS® Flash EEPROM per node

Memory Capacity

Each node has up to sixteen (16) DIMM slots supporting up to 1 TB of DDR3-1866/1600/1333/1066/800 MHz registered ECC SDRAM in 1 GB, 2 GB, 4 GB, 8 GB, 16 GB or 32 GB size sizes of 1.5V or 1.35V voltages.

Note: refer to Section 5-6 for details on installation.

Note: Check the Supermicro website (www.supermicro.com) for the latest memory support information.

SAS Drive Bays

The SuperServer 2027PR-HC0R-HC0TR-HC0FR contains twenty-four (24) hot-swap drive bays that support standard SAS drives.

PCI Expansion

The SuperServer 2027PR-HC0R-HC0TR-HC0FR has one (1) PCI Express 3.0 x16 slot (Slot 1) available per node.

Serverboard

X9DRT-P/PIBF/PT serverboard (proprietary form factor)

Dimensions: (LxW) 18.64" x 6.80" (473.46.72 mm x 172.72 mm)

Chassis

SC217HQ+-R2K02B (2U rackmount)
Dimensions: (WxHxD) 17.25 x 3.47 x 28.5 in. (438 x 88 x 724 mm)

Weight

Gross (Bare Bone): 85 lbs. (38.6 kg.)

System Cooling

The system has four (4) 8-cm PWM system cooling fans

Note: The system cooling fans are NOT redundant, hot-plug.

System Input Requirements

AC Input Voltage: 85-264V AC auto-range
Rated Input Current: 15 - 5A
Rated Input Frequency: 47 to 63 Hz
Efficiency: 90+ (Platinum Level)

Power Supply

Rated Output Power: 2000 Watts (Part# PWS-R2K02BP)
Rated Output Voltages: +12V (135A@180-264V, 100A@120-140V), +5Vsb (6A)

Operating Environment

Operating Temperature: 0º to 35º C (50º to 95º F)
Non-operating Temperature: -40º to 70º C (-40º to 158º F)
Operating Relative Humidity: 20% to 95% (non-condensing)
Non-operating Relative Humidity: 5 to 95% (non-condensing)

Note: The system power supplies are redundant, hot-plug.

Regulatory Compliance

Electromagnetic Emissions: FCC Class A, EN 55022 Class A, EN 61000-3-2/-3-3, CISPR 22 Class A

Electromagnetic Immunity: EN 55024/CISPR 24, (EN 61000-4-2, EN 61000-4-3, EN 61000-4-4, EN 61000-4-5, EN 61000-4-6, EN 61000-4-8, EN 61000-4-11)

Safety: CSA/EN/IEC/UL 60950-1 Compliant, UL or CSA Listed (USA and Canada), CE Marking (Europe)

California Best Management Practices Regulations for Perchlorate Materials: This Perchlorate warning applies only to products containing CR (Manganese Dioxide) Lithium coin cells. “Perchlorate Material-special handling may apply. See www.dtsc.ca.gov/hazardouswaste/perchlorate” for further details.

Notes

(continued from front)

The products sold by Supermicro are not intended for and will not be used in life support systems, medical equipment, nuclear facilities or systems, aircraft, aircraft devices, aircraft/emergency communication devices or other critical systems whose failure to perform be reasonably expected to result in significant injury or loss of life or catastrophic property damage. Accordingly, Supermicro disclaims any and all liability, and should buyer use or sell such products for use in such ultra-hazardous applications, it does so entirely at its own risk. Furthermore, buyer agrees to fully indemnify, defend and hold Supermicro harmless for and against any and all claims, demands, actions, litigation, and proceedings of any kind arising out of or related to such ultra-hazardous use or sale.