Blade Server Product Roadmap

Blade Team

Q4’2019

We Keep IT Green™

© 2019 Supermicro

SuperBlade Switch Data Plane – 2x Switch (414E)

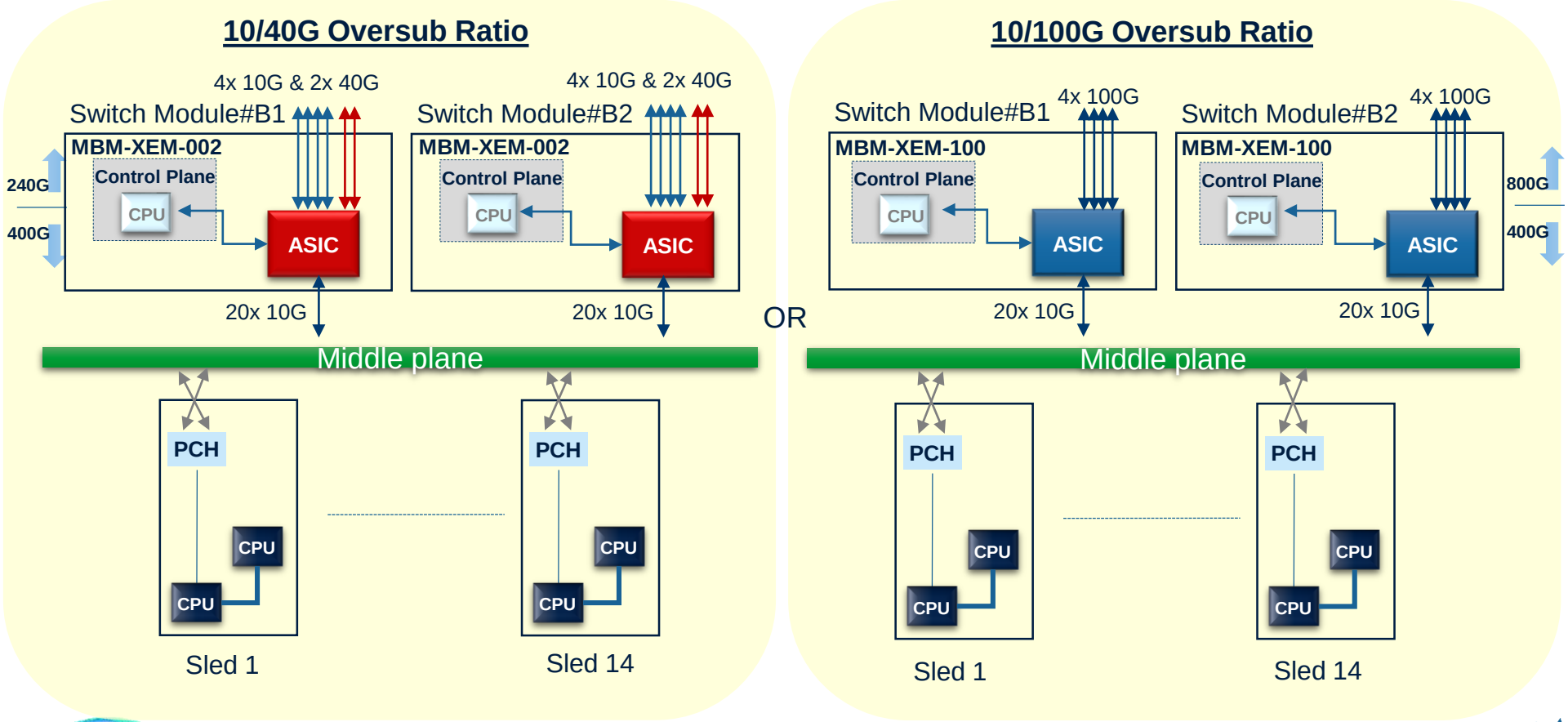

© 2019 Supermicro

SuperBlade Switch Data Plane – 4x Switch (610J)

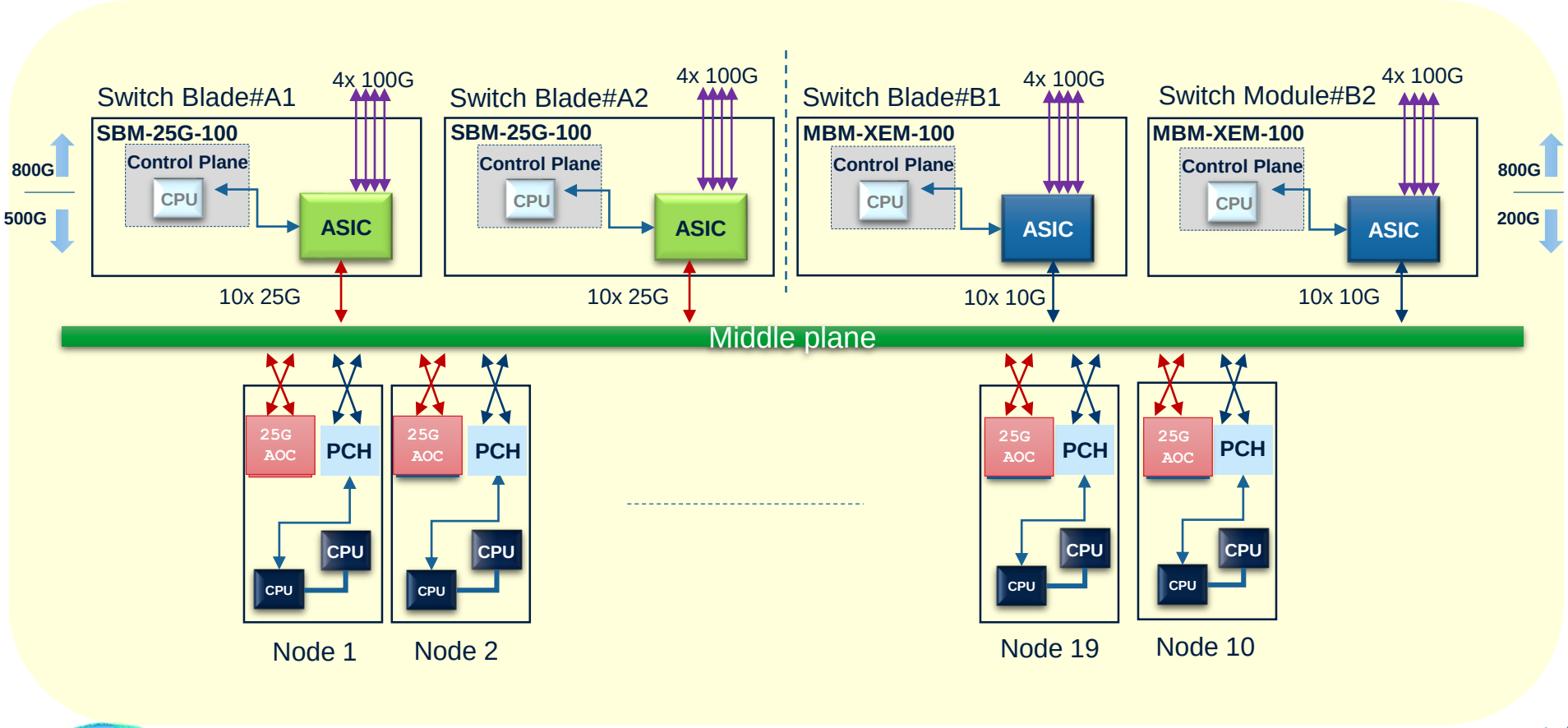

© 2019 Supermicro

SuperBlade Switch Data Plane – 100G/200G IBS (820C)

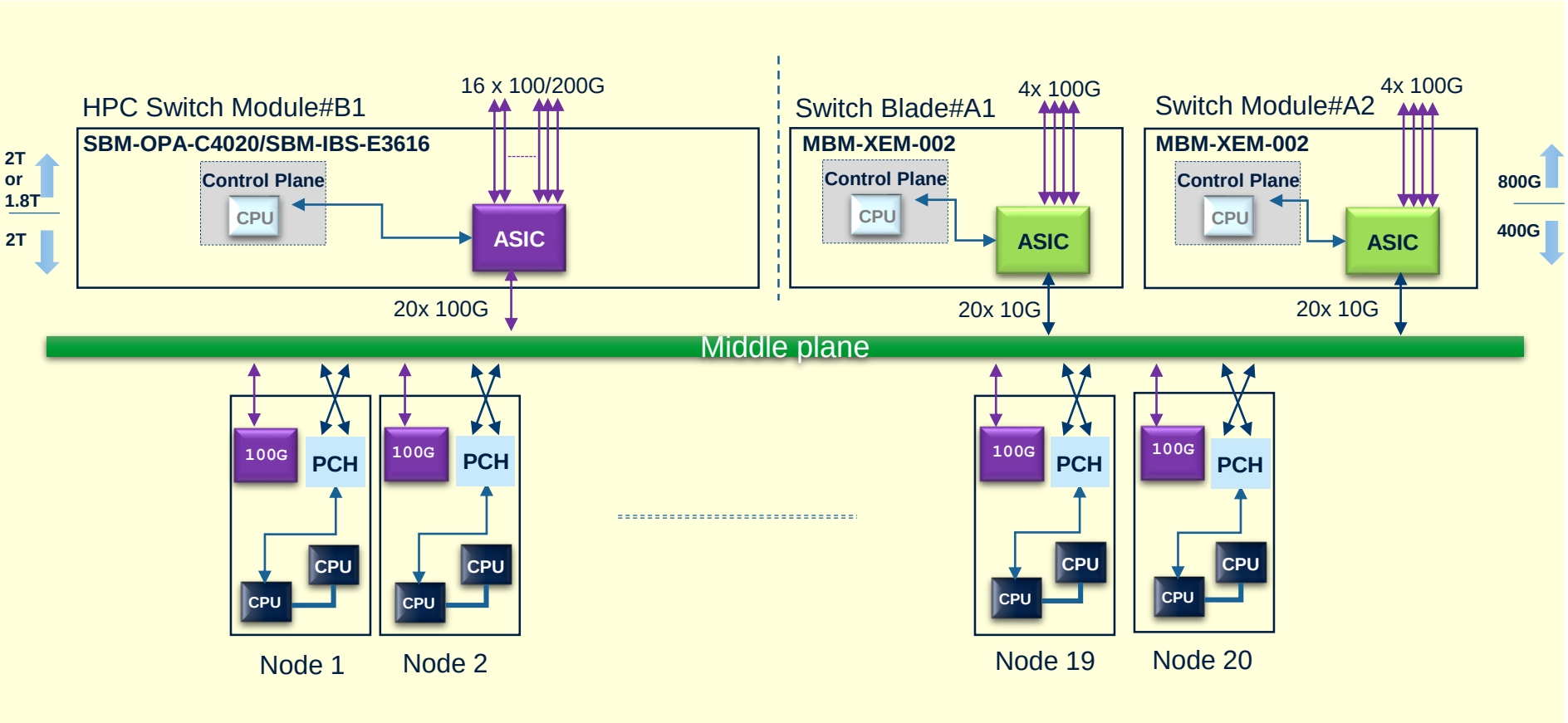

© 2019 Supermicro

Data Plane of MicroBlade MBE-628E(B) (I)

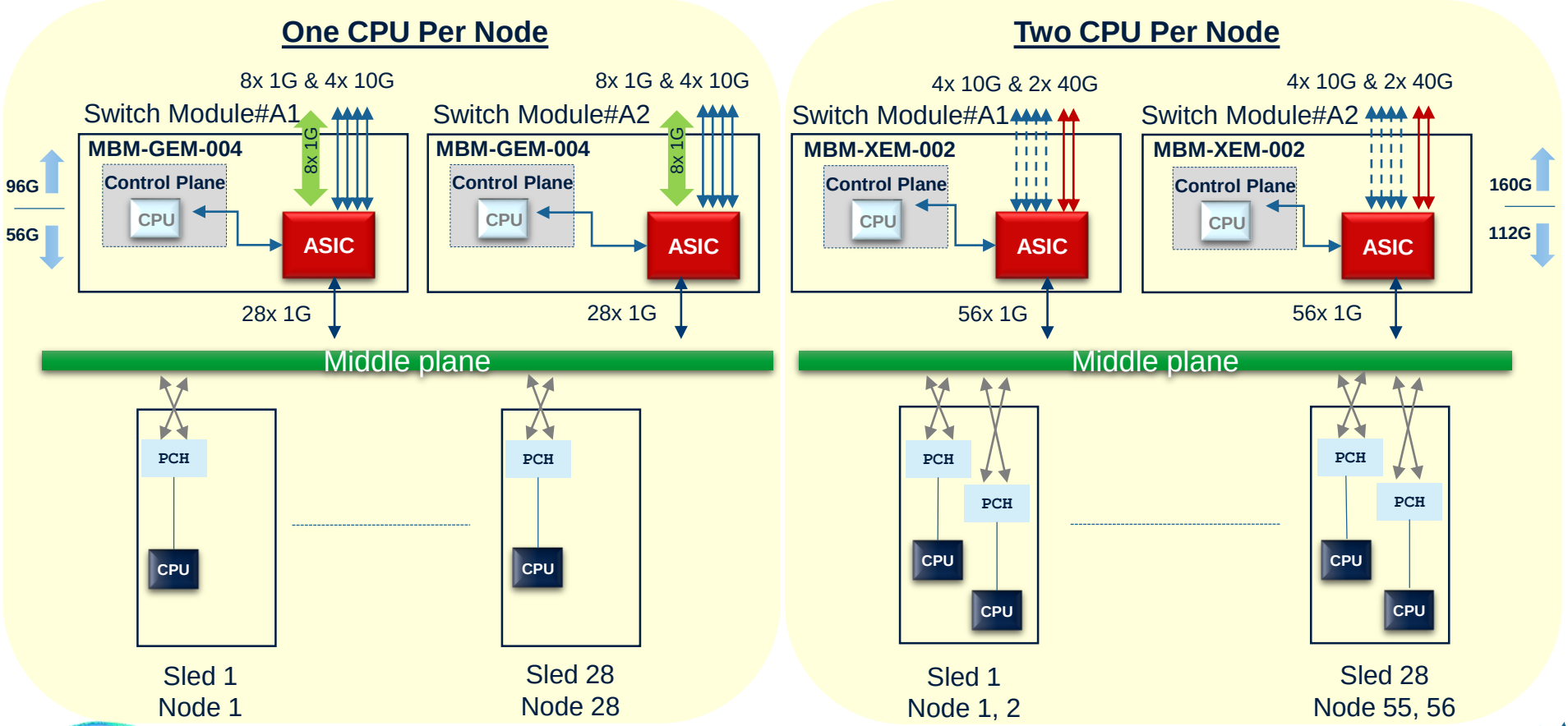

© 2019 Supermicro

Data Plane of MicroBlade MBE-628E(B) (II)

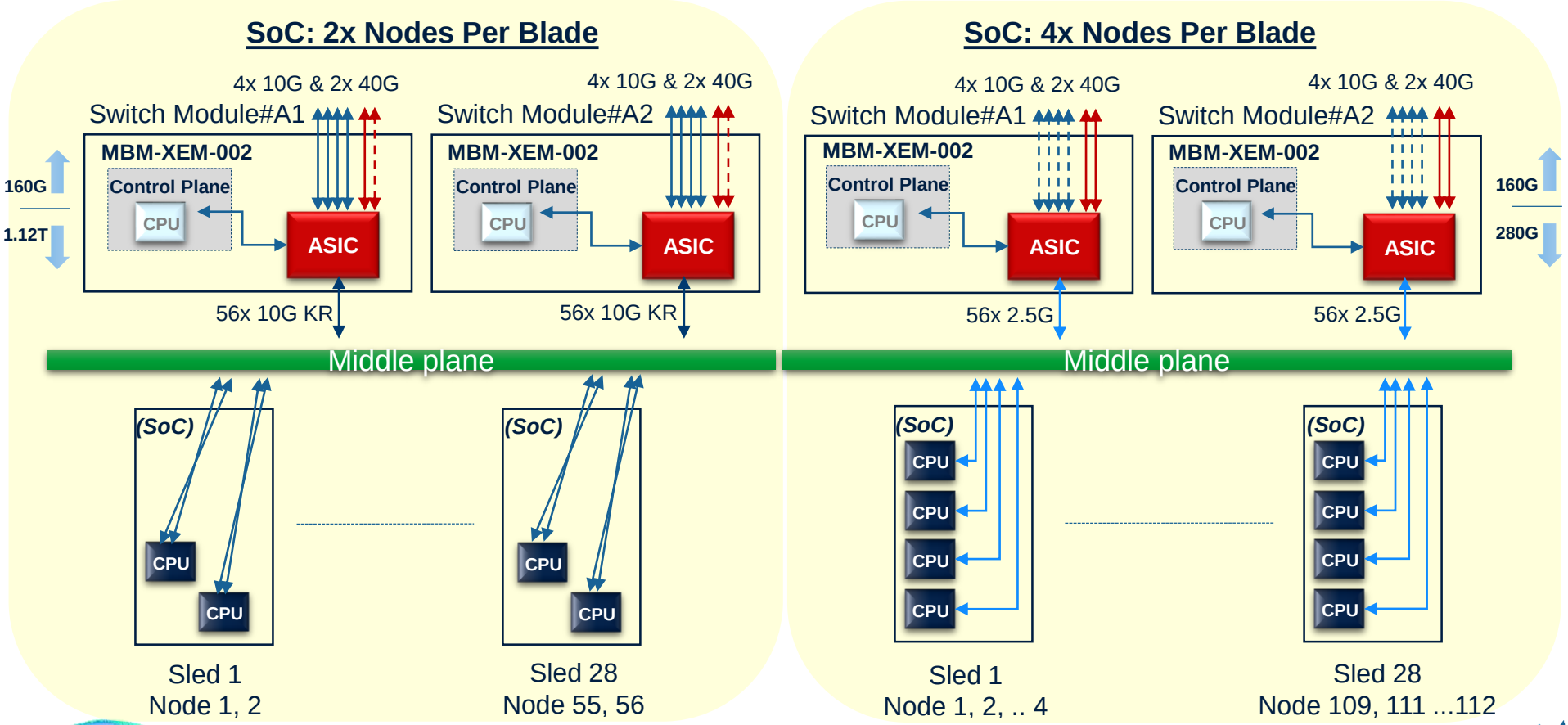

© 2019 Supermicro

Management Plane Redundancy (820J/610J/628E)

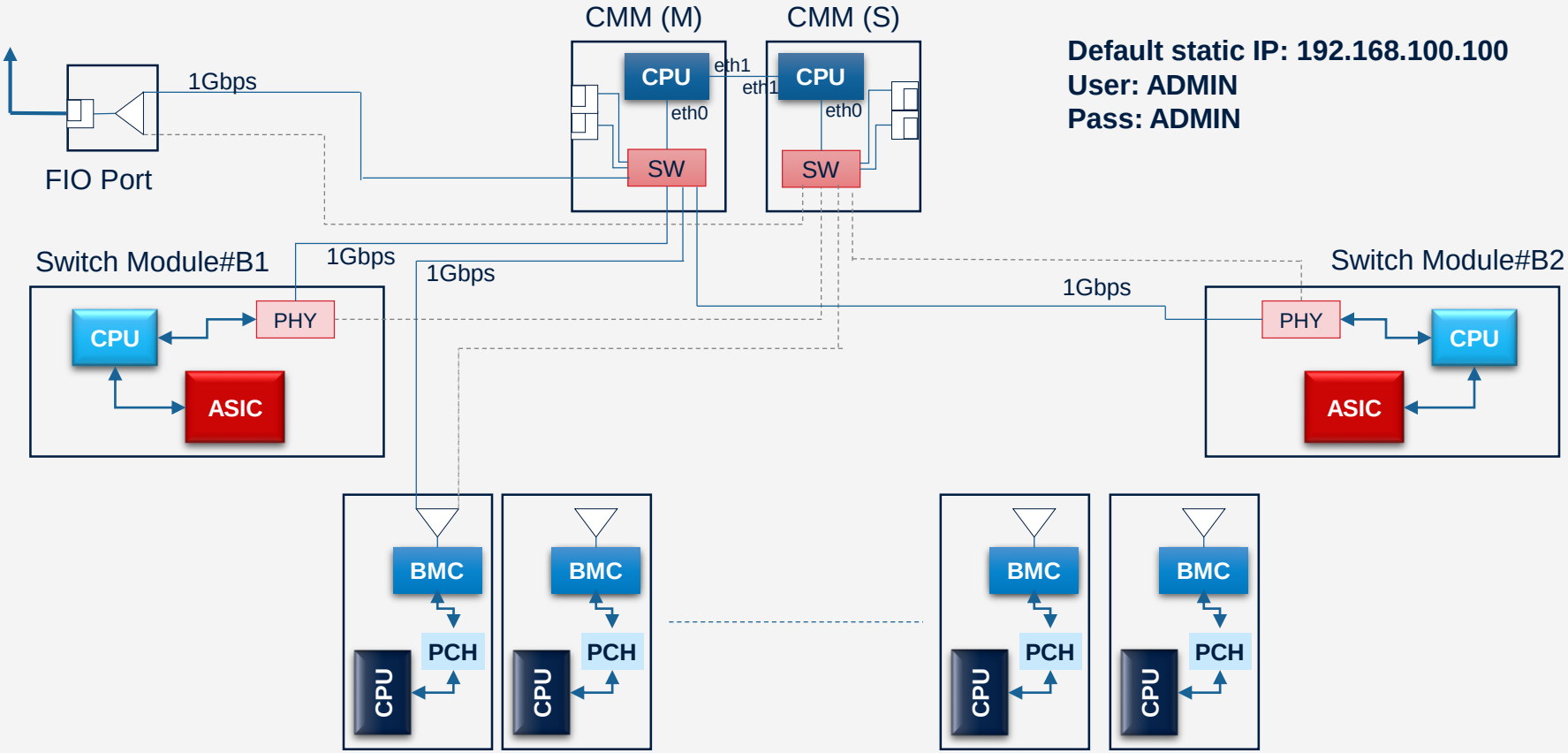

© 2019 Supermicro

Thank You

For more information, visit www.supermicro.com or contact
marketing@supermicro.com

© 2019 Supermicro

Disclaimer

Super Micro Computer, Inc. may make changes to specifications and product descriptions at any time, without notice. The information presented in this document is for informational purposes only and may contain technical inaccuracies, omissions and typographical errors. Any performance tests and ratings are measured using systems that reflect the approximate performance of Super Micro Computer, Inc. products as measured by those tests. Any differences in software or hardware configuration may affect actual performance, and Super Micro Computer, Inc. does not control the design or implementation of third party benchmarks or websites referenced in this document. The information contained herein is subject to change and may be rendered inaccurate for many reasons, including but not limited to any changes in product and/or roadmap, component and hardware revision changes, new model and/or product releases, software changes, firmware changes, or the like. Super Micro Computer, Inc. assumes no obligation to update or otherwise correct or revise this information.

SUPER MICRO COMPUTER, INC. MAKES NO REPRESENTATIONS OR WARRANTIES WITH RESPECT TO THE CONTENTS HEREOF AND ASSUMES NO RESPONSIBILITY FOR ANY INACCURACIES, ERRORS OR OMISSIONS THAT MAY APPEAR IN THIS INFORMATION.

SUPER MICRO COMPUTER, INC. SPECIFICALLY DISCLAIMS ANY IMPLIED WARRANTIES OF MERCHANTABILITY OR FITNESS FOR ANY PARTICULAR PURPOSE. IN NO EVENT WILL SUPER MICRO COMPUTER, INC. BE LIABLE TO ANY PERSON FOR ANY DIRECT, INDIRECT, SPECIAL OR OTHER CONSEQUENTIAL DAMAGES ARISING FROM THE USE OF ANY INFORMATION CONTAINED HEREIN, EVEN IF SUPER MICRO COMPUTER, Inc. IS EXPRESSLY ADVISED OF THE POSSIBILITY OF SUCH DAMAGES.

ATTRIBUTION

© 2019 Super Micro Computer, Inc. All rights reserved.